Map Lot 075-040-004-003 Account 2482 Location 409 PORTLAND RD Card 1 Of 1 8/05/2024

PHIPPS, WILLIAM H
PO BOX 1325
YARMOUTH ME 04096

B23144P49

Inspection Witnessed By:

X Date

No./Date	Description	Date Insp.

Notes:
5/24-FR=DR

Gray

Property Data

Neighborhood **29 Portland Rd**

Tree Growth Year **0**

REVIEW **0**

Bulding Permit **0**

Zone/Land Use **18 Medium Density**

Secondary Zone

Topography **2 Rolling**

1.Level 4.Below St 7.
2.Rolling 5.Low 8.
3.Above St 6.Swampy 9.

Utilities **4.Drilled Well/Point 6 Septic System**

1.Public 4.Dr Well/Po 7.Cesspool
2.Water 5.Dug Well 8.Lake
3.Holding Ta 6.Septic 9.None

Street **1 Paved**

1.Paved 4.Proposed
2.Semi Imp 5.R/O/W 8.
3.Gravel 6. 9.None

GIS Map **75**

Field Review **1**

Sale Data

Sale Date **9/12/2005**

Price **95,000**

Sale Type

1.Land 4.Mobile 7.COM
2.L & B 5.Other 8.
3.Building 6.Condo 9.

Financing

1.Convent 4.Seller 7.
2.FHA/VA 5.Private 8.
3.Assumed 6.Cash 9.Unknown

Validity

1.Valid 4.Split 7.Multiple
2.Related 5.Partial 8.Other
3.Distress 6.Exempt 9.Estate

Verified

1.Buyer 4.Agent 7.Family
2.Seller 5.Pub Rec 8.Other
3.Lender 6.MLS 9.

Assessment Record

Year	Land	Buildings	Exempt	Total
2011	38,500	65,292	0	103,792
2012	38,500	65,292	0	103,792
2013	38,500	65,292	0	103,792
2014	38,500	65,292	0	103,792
2015	38,500	65,300	0	103,800
2016	38,500	65,300	0	103,800
2017	38,500	63,500	0	102,000
2018	38,500	63,500	0	102,000
2019	50,100	79,400	0	129,500
2020	50,100	79,400	0	129,500
2021	50,100	79,400	0	129,500
2022	50,100	79,400	0	129,500
2023	50,100	97,200	0	147,300
Calc.	100,300	141,500	0	241,800

Land Data

Front Foot

11.Water (0-200)
12.Water (201-400
13.Water (401-800
14.Water (801-160
15.Water (1601-32

Square Foot

16.Water(3201-
17.Water SF Ameni
18.Water View
19.Water Influenc
20.ShoreFront A

Fract. Acre

21.Base Lot
22.Base Lot Vacan
23.Base Lot Unpav

Acres

24.Acres to 10
25.Acres 11-30
26.Acres 31-50
27.Acres 51& over
28.Acres 71 & Ove
29.Woods (41+)

Type	Effective Frontage	Effective Depth	Influence Factor	Influence Code
			%	
			%	
			%	
			%	
			%	
			%	
			%	
Square Feet				
			%	
			%	
			%	
			%	
			%	
			%	
			%	
Acreage/Sites				
21	0.75		100 %	0
			%	
			%	
			%	
			%	
			%	
			%	

Total Acreage 0.75

Influence Codes

1.Unimproved
2.Excess Frtg
3.Topography
4.Size/Shape
5.Access
6.Restriction
7.Open Space
8.Environmental
9.Condo

Acres

30.Blueberry(1-20
31.Blueberry(21 -
32.Crop Land
33.Pasture
34.Shorefront B
35.Shorefront C
36.ANTENNA SITE
37.Softwood TG
38.Mixed Wood TG
39.Hardwood TG
40.Wasteland
41.Woodland
42.Mobile Home Si
43.Camp Site
44.Lot Improvemen
45.BA SF - Oce
46.SP Meadow Cond

Proposed Value

Gray

Map Lot 075-040-004-003 | Account 2482 | Location 409 PORTLAND RD | Card 1 Of 1 | 8/05/2024

Building Style	**1 Conventional**	
1.Conv.	5.Garrison	9.NE farm
2.Ranch	6.Split	10.Colonia
3.R Ranch/	7.Contemp	11.Cottage
4.Cape	8.Log	12.Gambrel
Dwelling Units	**1**	
Other Units	**0**	
Stories	**2 Two Story**	
1.1	4.1.5	7.
2.2	5.1.75	8.
3.3	6.2.5	9.
Exterior Walls	**1 Clapboard**	
1.Clapboar	5.Stucco	9.B & B
2.Vin/Al	6.Brick	10.Cemplan
3.Compos./	7.Stone	11.Concret
4.Asbestos	8.Wood Shi	12.Wood Bo
Roof Surface	**1 Asphalt Shingles**	
1.Asphalt	4.Composit	7.Other
2.Slate	5.Wood	8.
3.Metal	6.Roll Roo	9.
SF Masonry Trim	**0**	
SOLAR VOLTAIC	**0**	
OPEN-4-	**0**	
Year Built	**1955**	
Year Remodeled	**1992**	
Foundation	**2 Concrete Block**	
1.Concrete	4.Wood	7.
2.C Block	5.Slab	8.
3.Br/Stone	6.Piers	9.
Basement	**4 Full Basement**	
1.1/4 Bmt	4.Full Bmt	7.
2.1/2 Bmt	5.Crwl	8.
3.3/4 Bmt	6.	9.None
Bsmt Gar # Cars	**0**	
Wet Basement	**1 Dry Basement**	
1.Dry	4.	7.
2.Damp	5.	8.
3.Wet	6.	9.

SF Bsmt Living	**0**	
Fin Bsmt Grade	**0 0**	
Secondary Heat	**0**	
Heat Type	**100%**	**6 Monitor**
1.HWBB	5.FWA	9.None
2.HWCI	6.Monitor	10.UNH2F
3.HWRF	7.Electric	11.Geother
4.Steam	8.Fl/Wall	12.Heat/Co
Cool Type	**0%**	**9 None**
1.Central	4.W&C Air	7.
2.Evapor	5.	8.
3.H Pump	6.	9.None
Kitchen Style	**2 Typical**	
1.Modern	4.Obsolete	7.
2.Typical	5.	8.
3.Old Type	6.	9.None
Bath(s) Style	**2 Typical Bath(s)**	
1.Modern	4.Obsolete	7.
2.Typical	5.	8.
3.Old Type	6.	9.None
# Rooms	**5**	
# Bedrooms	**3**	
# Full Baths	**1**	
# Half Baths	**0**	
# Addn Fixtures	**0**	
# Fireplaces	**0**	

Layout	**1 Typical**	
1.Typical	4.	7.
2.Inadeq	5.	8.
3.	6.	9.
Attic	**9 None**	
1.1/4 Fin	4.Full Fin	7.
2.1/2 Fin	5.Fl/Stair	8.
3.3/4 Fin	6.	9.None
Insulation	**1 Full**	
1.Full	4.Minimal	7.
2.Heavy	5.	8.
3.Capped	6.	9.None
Unfinished %	**0%**	
Grade & Factor	**3 Average 100%**	
1.E Grade	4.B Grade	7.SC Grade
2.D Grade	5.A Grade	8.
3.C Grade	6.AA Grade	9.Same
SQFT (Footprint)	**440**	
Condition	**4 Average**	
1.Poor	4.Avg	7.V G
2.Fair	5.Avg+	8.Exc
3.Avg-	6.Good	9.Same
Phys. % Good	**0%**	
Funct. % Good	**100%**	
Functional Code	**9 None**	
1.Incomp	4.Delap	7.Layout
2.O-Built	5.Bsmt	8.Long Term
3.Damage	6.Style	9.None
Econ. % Good	**95%**	
Economic Code	**Location**	
0.None	3.No Power	6.Obsolete
1.Location	4.Generate	9.None
2.Encroach	5.Flood Pl	9.
Entrance Code	**5 Estimated**	
1.Interior	4.Vacant	7.
2.Refusal	5.Estimate	8.
3.Informed	6.	9.
Information Code	**5 Estimate**	
1.Owner	4.Agent	7.
2.Relative	5.Estimate	8.
3.Tenant	6.Other	9.

Date Inspected 5/30/2024

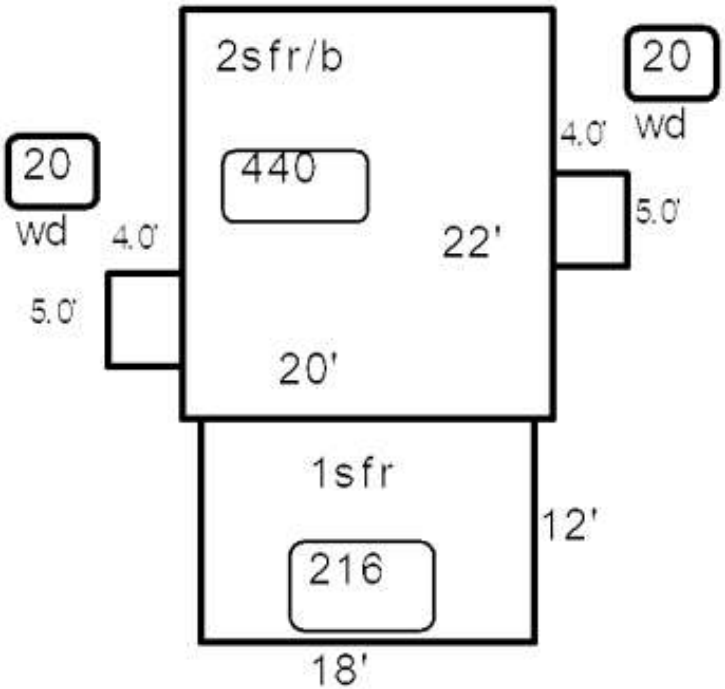

Additions, Outbuildings & Improvements

Type	Year	Units	Grade	Cond	Phys.	Funct.	Sound Value
1 One Story Frame	0	216	0 0	0	0 %	100 %	
68 Wood Deck	2014	20	0 0	0	0 %	100 %	
24 Frame Shed	0	192	2 100	3	0 %	100 %	
68 Wood Deck	2014	20	0 0	0	0 %	100 %	
					%	%	
					%	%	
					%	%	
					%	%	
					%	%	
					%	%	

1.One Story Fram
2.Two Story Fram
3.Three Story Fr
4.1 & 1/2 Story
5.1 & 3/4 Story
6.2 & 1/2 Story
21.Open Frame Por
22.Encl Frame Por
23.Frame Garage
24.Frame Shed
25.Frame Bay Wind
26.1SFr Overhang
27.Unfin Basement
28.Unfinished Att
29.Finished Attic

Proposed Value