Map Lot 069-041-045-001 Account 4755 Location 2 SORRENTO WAY Card 1 Of 1 8/05/2024

HARRIMAN, EMILY
GAFFAR, SETH
2B SORRENTO WAY
GRAY ME 04039

B39213P24

Previous Owner
DAUENHAUER, NANCY
2B SORRENTO WAY

GRAY ME 04039
Sale Date: 2/28/2022

Previous Owner
TZ PROPERTIES, LLC
15 APPLEBEE CIRCLE

PORTLAND ME 04103
Sale Date: 6/13/2016

Inspection Witnessed By:

X Date

No./Date	Description	Date Insp.

Notes:

Gray

Property Data

Neighborhood	**61 Sorrento Condo**
Tree Growth Year	**0**
REVIEW	**0**
Bulding Permit	**0**
Zone/Land Use	**11 Rural Residential & Agri**
Secondary Zone	
Topography	**1 Level**

1.Level	4.Below St	7.
2.Rolling	5.Low	8.
3.Above St	6.Swampy	9.

Utilities **4 Drilled Well/Point** **6 Septic System**

1.Public	4.Dr Well/Po	7.Cesspool
2.Water	5.Dug Well	8.Lake
3.Holding Ta	6.Septic	9.None

Street **1 Paved**

1.Paved	4.Proposed	
2.Semi Imp	5.R/O/W	8.
3.Gravel	6.	9.None

GIS Map	**69**
Field Review	**1**

Sale Data

Sale Date	**2/28/2022**
Price	**358,000**
Sale Type	**6 Condominium**

1.Land	4.Mobile	7.COM
2.L & B	5.Other	8.
3.Building	6.Condo	9.

Financing **1 Conventional**

1.Convent	4.Seller	7.
2.FHA/VA	5.Private	8.
3.Assumed	6.Cash	9.Unknown

Validity **1 Arms Length Sale**

1.Valid	4.Split	7.Multiple
2.Related	5.Partial	8.Other
3.Distress	6.Exempt	9.Estate

Verified **5 Public Record**

1.Buyer	4.Agent	7.Family
2.Seller	5.Pub Rec	8.Other
3.Lender	6.MLS	9.

Assessment Record

Year	Land	Buildings	Exempt	Total
2017	50,000	148,500	0	198,500
2018	50,000	148,500	0	198,500
2019	63,000	181,100	0	244,100
2020	63,000	181,100	0	244,100
2021	63,000	181,100	0	244,100
2022	63,000	181,100	0	244,100
2023	63,000	213,000	0	276,000
Calc.	80,000	296,900	25,000	351,900

Land Data

Front Foot	Type	Effective Frontage	Effective Depth	Influence Factor	Influence Code
11.Water (0-200)				%	
12.Water (201-400				%	
13.Water (401-800				%	
14.Water (801-160				%	
15.Water (1601-32				%	
				%	
				%	
Square Foot		**Square Feet**			
16.Water(3201-				%	
17.Water SF Ameni				%	
18.Water View				%	
19.Water Influenc				%	
20.ShoreFront A				%	
				%	
				%	
Fract. Acre		**Acreage/Sites**			
21.Base Lot	47	1.00		100 %	0
22.Base Lot Vacan				%	
23.Base Lot Unpav				%	
Acres				%	
24.Acres to 10				%	
25.Acres 11-30				%	
26.Acres 31-50				%	
27.Acres 51& over				%	
28.Acres 71 & Ove				%	
29.Woods (41+)					

Total Acreage 0.00

Influence Codes

1.Unimproved
2.Excess Frtg
3.Topography
4.Size/Shape
5.Access
6.Restriction
7.Open Space
8.Environmental
9.Condo

Acres

30.Blueberry(1-20
31.Blueberry(21 -
32.Crop Land
33.Pasture
34.Shorefront B
35.Shorefront C
36.ANTENNA SITE
37.Softwood TG
38.Mixed Wood TG
39.Hardwood TG
40.Wasteland
41.Woodland
42.Mobile Home Si
43.Camp Site
44.Lot Improvemen
45.BA SF - Oce
46.SP Meadow Cond

Proposed Value

Gray

Map Lot 069-041-045-001 | Account 4755 | Location 2 SORRENTO WAY | Card 1 Of 1 | 8/05/2024

Building Style	**28 Sorrento Condo**		
1.Conv.	5.Garrison	9.NE farm	
2.Ranch	6.Split	10.Colonia	
3.R Ranch/	7.Contemp	11.Cottage	
4.Cape	8.Log	12.Gambrel	
Dwelling Units	**1**		
Other Units	**0**		
Stories	**2 Two Story**		
1.1	4.1.5	7.	
2.2	5.1.75	8.	
3.3	6.2.5	9.	
Exterior Walls	**2 Vinyl/Aluminum**		
1.Clapboar	5.Stucco	9.B & B	
2.Vin/Al	6.Brick	10.Cemplan	
3.Compos./	7.Stone	11.Concret	
4.Asbestos	8.Wood Shi	12.Wood Bo	
Roof Surface	**1 Asphalt Shingles**		
1.Asphalt	4.Composit	7.Other	
2.Slate	5.Wood	8.	
3.Metal	6.Roll Roo	9.	
SF Masonry Trim	**0**		
SOLAR VOLTAIC	**0**		
OPEN-4-	**0**		
Year Built	**2015**		
Year Remodeled	**0**		
Foundation	**1 Concrete**		
1.Concrete	4.Wood	7.	
2.C Block	5.Slab	8.	
3.Br/Stone	6.Piers	9.	
Basement	**4 Full Basement**		
1.1/4 Bmt	4.Full Bmt	7.	
2.1/2 Bmt	5.Crwl	8.	
3.3/4 Bmt	6.	9.None	
Bsmt Gar # Cars	**0**		
Wet Basement	**1 Dry Basement**		
1.Dry	4.	7.	
2.Damp	5.	8.	
3.Wet	6.	9.	

SF Bsmt Living	**0**		
Fin Bsmt Grade	**0 0**		
Secondary Heat	**0**		
Heat Type	**100%**	**1 Hot Water BB**	
1.HWBB	5.FWA	9.None	
2.HWCI	6.Monitor	10.UNH2F	
3.HWRF	7.Electric	11.Geother	
4.Steam	8.Fl/Wall	12.Heat/Co	
Cool Type	**0%**	**9 None**	
1.Central	4.W&C Air	7.	
2.Evapor	5.	8.	
3.H Pump	6.	9.None	
Kitchen Style	**2 Typical**		
1.Modern	4.Obsolete	7.	
2.Typical	5.	8.	
3.Old Type	6.	9.None	
Bath(s) Style	**2 Typical Bath(s)**		
1.Modern	4.Obsolete	7.	
2.Typical	5.	8.	
3.Old Type	6.	9.None	
# Rooms	**5**		
# Bedrooms	**3**		
# Full Baths	**2**		
# Half Baths	**1**		
# Addn Fixtures	**1**		
# Fireplaces	**0**		

TRIO

Layout	**1 Typical**		
1.Typical	4.	7.	
2.Inadeq	5.	8.	
3.	6.	9.	
Attic	**9 None**		
1.1/4 Fin	4.Full Fin	7.	
2.1/2 Fin	5.Fl/Stair	8.	
3.3/4 Fin	6.	9.None	
Insulation	**1 Full**		
1.Full	4.Minimal	7.	
2.Heavy	5.	8.	
3.Capped	6.	9.None	
Unfinished %	**0%**		
Grade & Factor	**4 Good 100%**		
1.E Grade	4.B Grade	7.SC Grade	
2.D Grade	5.A Grade	8.	
3.C Grade	6.AA Grade	9.Same	
SQFT (Footprint)	**640**		
Condition	**4 Average**		
1.Poor	4.Avg	7.V G	
2.Fair	5.Avg+	8.Exc	
3.Avg-	6.Good	9.Same	
Phys. % Good	**0%**		
Funct. % Good	**100%**		
Functional Code	**9 None**		
1.Incomp	4.Delap	7.Layout	
2.O-Built	5.Bsmt	8.Long Term	
3.Damage	6.Style	9.None	
Econ. % Good	**100%**		
Economic Code	**None**		
0.None	3.No Power	6.Obsolete	
1.Location	4.Generate	9.None	
2.Encroach	5.Flood Pl	9.	
Entrance Code	**0**		
1.Interior	4.Vacant	7.	
2.Refusal	5.Estimate	8.	
3.Informed	6.	9.	
Information Code	**0**		
1.Owner	4.Agent	7.	
2.Relative	5.Estimate	8.	
3.Tenant	6.Other	9.	

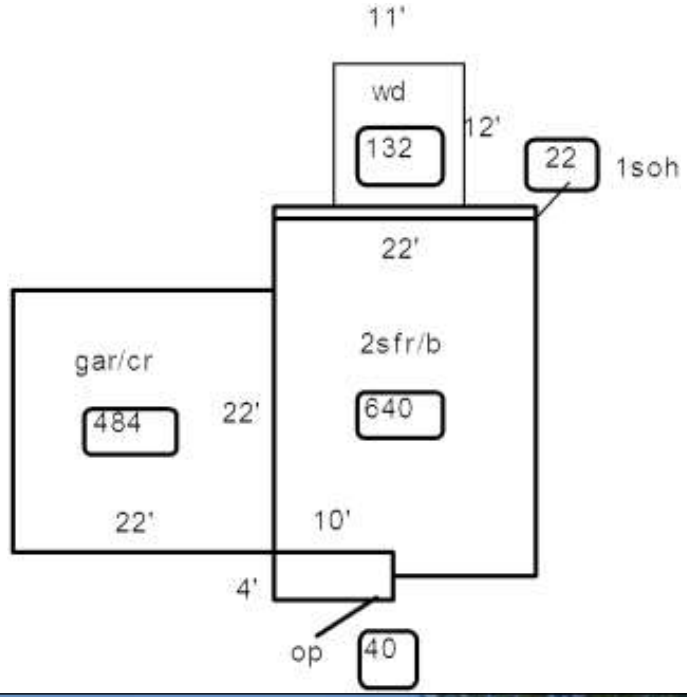

Date Inspected

Additions, Outbuildings & Improvements

Type	Year	Units	Grade	Cond	Phys.	Funct.	Sound Value
21 Open Frame	0	40	0 0	0	0 %	0 %	
68 Wood Deck	0	132	0 0	0	0 %	0 %	
23 Frame Garage	0	484	0 0	0	0 %	0 %	
26 1SFr Overhang	0	22	0 0	0	0 %	0 %	
					%	%	
					%	%	
					%	%	
					%	%	
					%	%	
					%	%	

1.One Story Fram
2.Two Story Fram
3.Three Story Fr
4.1 & 1/2 Story
5.1 & 3/4 Story
6.2 & 1/2 Story
21.Open Frame Por
22.Encl Frame Por
23.Frame Garage
24.Frame Shed
25.Frame Bay Wind
26.1SFr Overhang
27.Unfin Basement
28.Unfinished Att
29.Finished Attic

Proposed Value