Map Lot 056-017-032-000 Account 791 Location 34 FRAN CIRCLE Card 1 Of 1 8/05/2024

BREGMAN, KIM J
34 FRAN CIR
GRAY ME 04039

B6677P102

Previous Owner
BREGMAN, EDWARD A
BREGMAN, KIM J
34 FRAN CIR
GRAY ME 04039
Sale Date: 11/17/2021

Inspection Witnessed By:

X Date

| No./Date | Description | Date Insp. |
|---|---|---|
| | | |
| | | |
| | | |

Notes:

1/5/2022 - Acreage corrected to 2.09 based on survey. 5/24-DR FIELD REVIEW

**Gray**

## Property Data

Neighborhood **83 Avg-Good Location**

Tree Growth Year **0**

REVIEW **0**

Bulding Permit **0**

Zone/Land Use **11 Rural Residential & Agri**

Secondary Zone

Topography **2 Rolling**

1.Level 4.Below St 7.
2.Rolling 5.Low 8.
3.Above St 6.Swampy 9.

Utilities **4 Drilled Well/Point** **6 Septic System**

1.Public 4.Dr Well/Po 7.Cesspool
2.Water 5.Dug Well 8.Lake
3.Holding Ta 6.Septic 9.None

Street **1 Paved**

1.Paved 4.Proposed
2.Semi Imp 5.R/O/W 8.
3.Gravel 6. 9.None

GIS Map **56**

Field Review **1**

## Sale Data

Sale Date **11/17/2021**

Price

Sale Type
1.Land 4.Mobile 7.COM
2.L & B 5.Other 8.
3.Building 6.Condo 9.

Financing
1.Convent 4.Seller 7.
2.FHA/VA 5.Private 8.
3.Assumed 6.Cash 9.Unknown

Validity
1.Valid 4.Split 7.Multiple
2.Related 5.Partial 8.Other
3.Distress 6.Exempt 9.Estate

Verified
1.Buyer 4.Agent 7.Family
2.Seller 5.Pub Rec 8.Other
3.Lender 6.MLS 9.

## Assessment Record

| Year | Land | Buildings | Exempt | Total |
|---|---|---|---|---|
| 2011 | 57,070 | 145,863 | 8,500 | 194,433 |
| 2012 | 57,070 | 145,863 | 8,500 | 194,433 |
| 2013 | 57,070 | 145,863 | 8,500 | 194,433 |
| 2014 | 57,070 | 147,451 | 8,500 | 196,021 |
| 2015 | 57,100 | 147,500 | 9,000 | 195,600 |
| 2016 | 57,100 | 147,500 | 9,000 | 195,600 |
| 2017 | 57,100 | 147,500 | 13,500 | 191,100 |
| 2018 | 57,100 | 147,500 | 18,000 | 186,600 |
| 2019 | 70,700 | 213,200 | 20,000 | 263,900 |
| 2020 | 70,700 | 213,200 | 20,000 | 263,900 |
| 2021 | 70,700 | 213,200 | 25,000 | 258,900 |
| 2022 | 70,700 | 213,200 | 25,000 | 258,900 |
| 2023 | 70,800 | 241,200 | 25,000 | 287,000 |
| Calc. | 139,200 | 393,400 | 25,000 | 507,600 |

## Land Data

**Front Foot**
11.Water (0-200)
12.Water (201-400
13.Water (401-800
14.Water (801-160
15.Water (1601-32

**Square Foot**
16.Water( 3201-
17.Water SF Ameni
18.Water View
19.Water Influenc
20.ShoreFront A

**Fract. Acre**
21.Base Lot
22.Base Lot Vacan
23.Base Lot Unpav

**Acres**
24.Acres to 10
25.Acres 11-30
26.Acres 31-50
27.Acres 51& over
28.Acres 71 & Ove
29.Woods (41+)

| Type | Effective Frontage | Effective Depth | Influence Factor | Influence Code |
|---|---|---|---|---|
| | | | % | |
| | | | % | |
| | | | % | |
| | | | % | |
| | | | % | |
| | | | % | |
| | | | % | |
| **Square Feet** | | | | |
| | | | % | |
| | | | % | |
| | | | % | |
| | | | % | |
| | | | % | |
| | | | % | |
| | | | % | |
| **Acreage/Sites** | | | | |
| 21 | 1.84 | | 100 % | 0 |
| 24 | 0.25 | | 100 % | 0 |
| | | | % | |
| | | | % | |
| | | | % | |
| | | | % | |
| | | | % | |

**Total Acreage** 2.09

**Influence Codes**
1.Unimproved
2.Excess Frtg
3.Topography
4.Size/Shape
5.Access
6.Restriction
7.Open Space
8.Environmental
9.Condo

**Acres**
30.Blueberry(1-20
31.Blueberry(21 -
32.Crop Land
33.Pasture
34.Shorefront B
35.Shorefront C
36.ANTENNA SITE
37.Softwood TG
38.Mixed Wood TG
39.Hardwood TG
40.Wasteland
41.Woodland
42.Mobile Home Si
43.Camp Site
44.Lot Improvemen
45.BA SF - Oce
46.SP Meadow Cond

Proposed Value

**Gray**

Map Lot 056-017-032-000 | Account 791 | Location 34 FRAN CIRCLE | Card 1 Of 1 | 8/05/2024

| | | | |
|---|---|---|---|
| Building Style | **12 Gambrel** | | |
| 1.Conv. | 5.Garrison | 9.NE farm | |
| 2.Ranch | 6.Split | 10.Colonia | |
| 3.R Ranch/ | 7.Contemp | 11.Cottage | |
| 4.Cape | 8.Log | 12.Gambrel | |
| Dwelling Units | **1** | | |
| Other Units | **0** | | |
| Stories | **2 Two Story** | | |
| 1.1 | 4.1.5 | 7. | |
| 2.2 | 5.1.75 | 8. | |
| 3.3 | 6.2.5 | 9. | |
| Exterior Walls | **2 Vinyl/Aluminum** | | |
| 1.Clapboar | 5.Stucco | 9.B & B | |
| 2.Vin/Al | 6.Brick | 10.Cemplan | |
| 3.Compos./ | 7.Stone | 11.Concret | |
| 4.Asbestos | 8.Wood Shi | 12.Wood Bo | |
| Roof Surface | **1 Asphalt Shingles** | | |
| 1.Asphalt | 4.Composit | 7.Other | |
| 2.Slate | 5.Wood | 8. | |
| 3.Metal | 6.Roll Roo | 9. | |
| SF Masonry Trim | **0** | | |
| SOLAR VOLTAIC | **0** | | |
| OPEN-4- | **0** | | |
| Year Built | **1978** | | |
| Year Remodeled | **0** | | |
| Foundation | **1 Concrete** | | |
| 1.Concrete | 4.Wood | 7. | |
| 2.C Block | 5.Slab | 8. | |
| 3.Br/Stone | 6.Piers | 9. | |
| Basement | **4 Full Basement** | | |
| 1.1/4 Bmt | 4.Full Bmt | 7. | |
| 2.1/2 Bmt | 5.Crwl | 8. | |
| 3.3/4 Bmt | 6. | 9.None | |
| Bsmt Gar # Cars | **0** | | |
| Wet Basement | **1 Dry Basement** | | |
| 1.Dry | 4. | 7. | |
| 2.Damp | 5. | 8. | |
| 3.Wet | 6. | 9. | |

| | | | |
|---|---|---|---|
| SF Bsmt Living | **0** | | |
| Fin Bsmt Grade | **0 0** | | |
| Secondary Heat | **0** | | |
| Heat Type | **100%** | **1 Hot Water BB** | |
| 1.HWBB | 5.FWA | 9.None | |
| 2.HWCI | 6.Monitor | 10.UNH2F | |
| 3.HWRF | 7.Electric | 11.Geother | |
| 4.Steam | 8.Fl/Wall | 12.Heat/Co | |
| Cool Type | **0%** | **9 None** | |
| 1.Central | 4.W&C Air | 7. | |
| 2.Evapor | 5. | 8. | |
| 3.H Pump | 6. | 9.None | |
| Kitchen Style | **2 Typical** | | |
| 1.Modern | 4.Obsolete | 7. | |
| 2.Typical | 5. | 8. | |
| 3.Old Type | 6. | 9.None | |
| Bath(s) Style | **2 Typical Bath(s)** | | |
| 1.Modern | 4.Obsolete | 7. | |
| 2.Typical | 5. | 8. | |
| 3.Old Type | 6. | 9.None | |
| # Rooms | **6** | | |
| # Bedrooms | **3** | | |
| # Full Baths | **2** | | |
| # Half Baths | **0** | | |
| # Addn Fixtures | **0** | | |
| # Fireplaces | **0** | | |

TRIO

| | | | |
|---|---|---|---|
| Layout | **1 Typical** | | |
| 1.Typical | 4. | 7. | |
| 2.Inadeq | 5. | 8. | |
| 3. | 6. | 9. | |
| Attic | **9 None** | | |
| 1.1/4 Fin | 4.Full Fin | 7. | |
| 2.1/2 Fin | 5.Fl/Stair | 8. | |
| 3.3/4 Fin | 6. | 9.None | |
| Insulation | **1 Full** | | |
| 1.Full | 4.Minimal | 7. | |
| 2.Heavy | 5. | 8. | |
| 3.Capped | 6. | 9.None | |
| Unfinished % | **0%** | | |
| Grade & Factor | **3 Average 110%** | | |
| 1.E Grade | 4.B Grade | 7.SC Grade | |
| 2.D Grade | 5.A Grade | 8. | |
| 3.C Grade | 6.AA Grade | 9.Same | |
| SQFT (Footprint) | **1008** | | |
| Condition | **5 Good** | | |
| 1.Poor | 4.Avg | 7.V G | |
| 2.Fair | 5.Avg+ | 8.Exc | |
| 3.Avg- | 6.Good | 9.Same | |
| Phys. % Good | **0%** | | |
| Funct. % Good | **100%** | | |
| Functional Code | **9 None** | | |
| 1.Incomp | 4.Delap | 7.Layout | |
| 2.O-Built | 5.Bsmt | 8.Long Term | |
| 3.Damage | 6.Style | 9.None | |
| Econ. % Good | **100%** | | |
| Economic Code | **None** | | |
| 0.None | 3.No Power | 6.Obsolete | |
| 1.Location | 4.Generate | 9.None | |
| 2.Encroach | 5.Flood Pl | 9. | |
| Entrance Code | **5 Estimated** | | |
| 1.Interior | 4.Vacant | 7. | |
| 2.Refusal | 5.Estimate | 8. | |
| 3.Informed | 6. | 9. | |
| Information Code | **5 Estimate** | | |
| 1.Owner | 4.Agent | 7. | |
| 2.Relative | 5.Estimate | 8. | |
| 3.Tenant | 6.Other | 9. | |

Date Inspected 5/24/2024

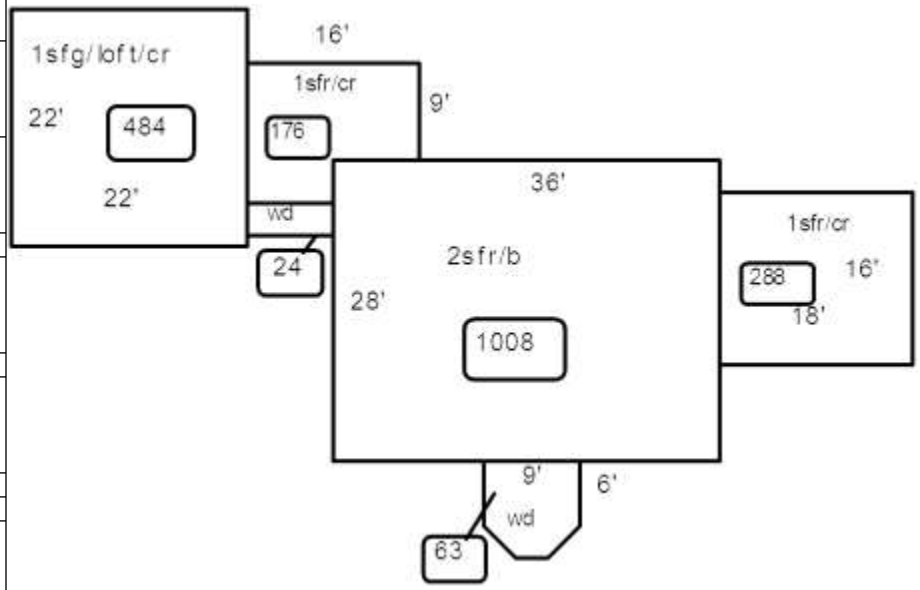

## Additions, Outbuildings & Improvements

| Type | Year | Units | Grade | Cond | Phys. | Funct. | Sound Value |
|---|---|---|---|---|---|---|---|
| 1 One Story Frame | 1986 | 288 | 0 0 | 0 | 0 % | 100 % | |
| 68 Wood Deck | 0 | 63 | 0 0 | 0 | 0 % | 100 % | |
| 68 Wood Deck | 0 | 24 | 0 0 | 0 | 0 % | 100 % | |
| 73 1.25 St Garage | 1997 | 484 | 0 0 | 0 | 0 % | 100 % | |
| 1 One Story Frame | 2000 | 176 | 0 0 | 0 | 0 % | 100 % | |
| | | | | | % | % | |
| | | | | | % | % | |
| | | | | | % | % | |
| | | | | | % | % | |
| | | | | | % | % | |

1.One Story Fram
2.Two Story Fram
3.Three Story Fr
4.1 & 1/2 Story
5.1 & 3/4 Story
6.2 & 1/2 Story
21.Open Frame Por
22.Encl Frame Por
23.Frame Garage
24.Frame Shed
25.Frame Bay Wind
26.1SFr Overhang
27.Unfin Basement
28.Unfinished Att
29.Finished Attic

Proposed Value