Map Lot 056-017-017-000 Account 776 Location 20 CAMBELL SHORE RD Card 1 Of 1 8/05/2024

GRANNELL, STEPHEN B
GRANNELL, CATHERINE S
PO BOX 115
GRAY ME 04039

B10554P97

Inspection Witnessed By:

X Date

No./Date	Description	Date Insp.

Notes:
5/24- DR FIELD REVIEW

Gray

Property Data

Neighborhood **82 Average Location**

Tree Growth Year **0**

REVIEW **0**

Bulding Permit **0**

Zone/Land Use **11 Rural Residential & Agri**

Secondary Zone

Topography **1 Level**

1.Level	4.Below St	7.
2.Rolling	5.Low	8.
3.Above St	6.Swampy	9.

Utilities **5.Dug Well** **6 Septic System**

1.Public	4.Drilled Well/Po	7.Cesspool
2.Water	5.Dug Well	8.Lake
3.Holding Ta	6.Septic	9.None

Street **1 Paved**

1.Paved	4.Proposed	
2.Semi Imp	5.R/O/W	8.
3.Gravel	6.	9.None

GIS Map **56**

Field Review **1**

Sale Data

Sale Date

Price

Sale Type

1.Land	4.Mobile	7.COM
2.L & B	5.Other	8.
3.Building	6.Condo	9.

Financing

1.Convent	4.Seller	7.
2.FHA/VA	5.Private	8.
3.Assumed	6.Cash	9.Unknown

Validity

1.Valid	4.Split	7.Multiple
2.Related	5.Partial	8.Other
3.Distress	6.Exempt	9.Estate

Verified

1.Buyer	4.Agent	7.Family
2.Seller	5.Pub Rec	8.Other
3.Lender	6.MLS	9.

Assessment Record

Year	Land	Buildings	Exempt	Total
2011	35,000	104,097	8,500	130,597
2012	35,000	104,097	8,500	130,597
2013	35,000	104,097	8,500	130,597
2014	35,000	104,097	8,500	130,597
2015	35,000	104,100	9,000	130,100
2016	35,000	104,100	9,000	130,100
2017	35,000	104,100	13,500	125,600
2018	35,000	104,100	18,000	121,100
2019	50,500	149,100	20,000	179,600
2020	50,500	149,100	20,000	179,600
2021	50,500	149,100	25,000	174,600
2022	50,500	149,100	25,000	174,600
2023	50,500	173,500	25,000	199,000
Calc.	109,700	250,900	25,000	335,600

Land Data

Front Foot

11.Water (0-200)
12.Water (201-400
13.Water (401-800
14.Water (801-160
15.Water (160-32

Square Foot

16.Water(3201-
17.Water SF Ameni
18.Water View
19.Water Influenc
20.ShoreFront A

Fract. Acre

21.Base Lot
22.Base Lot Vacan
23.Base Lot Unpav

Acres

24.Acres to 10
25.Acres 11-30
26.Acres 31-50
27.Acres 51& over
28.Acres 71 & Ove
29.Woods (41+)

Type	Effective Frontage	Effective Depth	Influence Factor	Influence Code
			%	
			%	
			%	
			%	
			%	
			%	
			%	
Square Feet				
			%	
			%	
			%	
			%	
			%	
			%	
			%	
Acreage/Sites				
21	0.50		100 %	0
			%	
			%	
			%	
			%	
			%	
			%	

Total Acreage 0.50

Influence Codes

1.Unimproved
2.Excess Frtg
3.Topography
4.Size/Shape
5.Access
6.Restriction
7.Open Space
8.Environmental
9.Condo

Acres

30.Blueberry(1-20
31.Blueberry(21 -
32.Crop Land
33.Pasture
34.Shorefront B
35.Shorefront C
36.ANTENNA SITE
37.Softwood TG
38.Mixed Wood TG
39.Hardwood TG
40.Wasteland
41.Woodland
42.Mobile Home Si
43.Camp Site
44.Lot Improvemen
45.BA SF - Oce
46.SP Meadow Cond

Proposed Value

Gray

Map Lot 056-017-017-000 | Account 776 | Location 20 CAMBELL SHORE RD | Card 1 Of 1 | 8/05/2024

Building Style	**12 Gambrel**	
1.Conv.	5.Garrison	9.NE farm
2.Ranch	6.Split	10.Colonia
3.R Ranch/	7.Contemp	11.Cottage
4.Cape	8.Log	12.Gambrel
Dwelling Units	**1**	
Other Units	**0**	
Stories	**2 Two Story**	
1.1	4.1.5	7.
2.2	5.1.75	8.
3.3	6.2.5	9.
Exterior Walls	**1 Clapboard**	
1.Clapboar	5.Stucco	9.B & B
2.Vin/Al	6.Brick	10.Cemplan
3.Compos./	7.Stone	11.Concret
4.Asbestos	8.Wood Shi	12.Wood Bo
Roof Surface	**1 Asphalt Shingles**	
1.Asphalt	4.Composit	7.Other
2.Slate	5.Wood	8.
3.Metal	6.Roll Roo	9.
SF Masonry Trim	**0**	
SOLAR VOLTAIC	**0**	
OPEN-4-	**0**	
Year Built	**1940**	
Year Remodeled	**0**	
Foundation	**2 Concrete Block**	
1.Concrete	4.Wood	7.
2.C Block	5.Slab	8.
3.Br/Stone	6.Piers	9.
Basement	**4 Full Basement**	
1.1/4 Bmt	4.Full Bmt	7.
2.1/2 Bmt	5.Crwl	8.
3.3/4 Bmt	6.	9.None
Bsmt Gar # Cars	**0**	
Wet Basement	**1 Dry Basement**	
1.Dry	4.	7.
2.Damp	5.	8.
3.Wet	6.	9.

SF Bsmt Living	**0**	
Fin Bsmt Grade	**0 0**	
Secondary Heat	**0**	
Heat Type	**100%**	**1 Hot Water BB**
1.HWBB	5.FWA	9.None
2.HWCI	6.Monitor	10.UNH2F
3.HWRF	7.Electric	11.Geother
4.Steam	8.Fl/Wall	12.Heat/Co
Cool Type	**50%**	**3 Heat Pump**
1.Central	4.W&C Air	7.
2.Evapor	5.	8.
3.H Pump	6.	9.None
Kitchen Style	**2 Typical**	
1.Modern	4.Obsolete	7.
2.Typical	5.	8.
3.Old Type	6.	9.None
Bath(s) Style	**2 Typical Bath(s)**	
1.Modern	4.Obsolete	7.
2.Typical	5.	8.
3.Old Type	6.	9.None
# Rooms	**5**	
# Bedrooms	**3**	
# Full Baths	**1**	
# Half Baths	**1**	
# Addn Fixtures	**0**	
# Fireplaces	**0**	

TRIO

Layout	**1 Typical**	
1.Typical	4.	7.
2.Inadeq	5.	8.
3.	6.	9.
Attic	**9 None**	
1.1/4 Fin	4.Full Fin	7.
2.1/2 Fin	5.Fl/Stair	8.
3.3/4 Fin	6.	9.None
Insulation	**1 Full**	
1.Full	4.Minimal	7.
2.Heavy	5.	8.
3.Capped	6.	9.None
Unfinished %	**0%**	
Grade & Factor	**3 Average 110%**	
1.E Grade	4.B Grade	7.SC Grade
2.D Grade	5.A Grade	8.
3.C Grade	6.AA Grade	9.Same
SQFT (Footprint)	**624**	
Condition	**4 Average**	
1.Poor	4.Avg	7.V G
2.Fair	5.Avg+	8.Exc
3.Avg-	6.Good	9.Same
Phys. % Good	**0%**	
Funct. % Good	**100%**	
Functional Code	**9 None**	
1.Incomp	4.Delap	7.Layout
2.O-Built	5.Bsmt	8.Long Term
3.Damage	6.Style	9.None
Econ. % Good	**100%**	
Economic Code	**None**	
0.None	3.No Power	6.Obsolete
1.Location	4.Generate	9.None
2.Encroach	5.Flood Pl	9.
Entrance Code	**5 Estimated**	
1.Interior	4.Vacant	7.
2.Refusal	5.Estimate	8.
3.Informed	6.	9.
Information Code	**5 Estimate**	
1.Owner	4.Agent	7.
2.Relative	5.Estimate	8.
3.Tenant	6.Other	9.

Date Inspected 5/24/2024

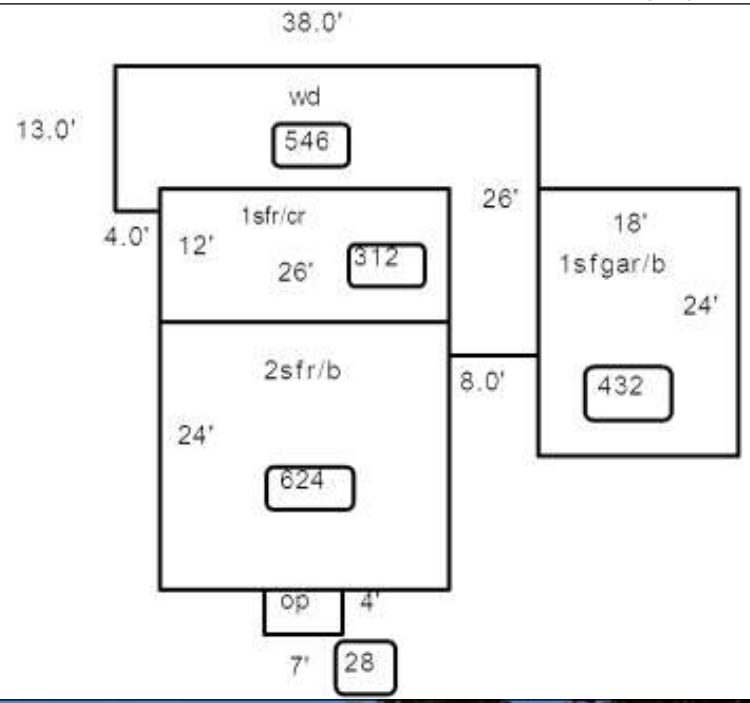

Proposed Value

Additions, Outbuildings & Improvements

Type	Year	Units	Grade	Cond	Phys.	Funct.	Sound Value
1 One Story Frame	0	312	0 0	0	0 %	100 %	
21 Open Frame	0	28	0 0	0	0 %	100 %	
23 Frame Garage	0	432	0 0	0	0 %	100 %	
27 Unfin Basement	0	432	0 0	0	0 %	100 %	
68 Wood Deck	0	546	0 0	0	0 %	100 %	
					%	%	
					%	%	
					%	%	
					%	%	
					%	%	

1.One Story Fram
2.Two Story Fram
3.Three Story Fr
4.1 & 1/2 Story
5.1 & 3/4 Story
6.2 & 1/2 Story
21.Open Frame Por
22.Encl Frame Por
23.Frame Garage
24.Frame Shed
25.Frame Bay Wind
26.1SFr Overhang
27.Unfin Basement
28.Unfinished Att
29.Finished Attic