Map Lot 053-043-008-005 Account 2729 Location 282 YARMOUTH RD Card 1 Of 1 8/05/2024

BERRY, CHRISTOPHER E
282 YARMOUTH ROAD
GRAY ME 04039

B32057P62 B33899P55

Inspection Witnessed By:

X Date

No./Date	Description	Date Insp.

Notes:
5/24 DR FIELD REVIEW

Gray

Property Data

Neighborhood **82 Average Location**

Tree Growth Year **0**

REVIEW **0**

Bulding Permit **0**

Zone/Land Use **11 Rural Residential & Agri**

Secondary Zone

Topography **2 Rolling**

1.Level 4.Below St 7.
2.Rolling 5.Low 8.
3.Above St 6.Swampy 9.

Utilities **2 Public Water 6 Septic System**

1.Public 4.Drilled Well/Po 7.Cesspool
2.Water 5.Dug Well 8.Lake
3.Holding Ta 6.Septic 9.None

Street **1 Paved**

1.Paved 4.Proposed
2.Semi Imp 5.R/O/W 8.
3.Gravel 6. 9.None

GIS Map **53**

Field Review **1**

Sale Data

Sale Date **1/30/2015**

Price **220,000**

Sale Type **2 Land & Buildings**

1.Land 4.Mobile 7.COM
2.L & B 5.Other 8.
3.Building 6.Condo 9.

Financing **9 Unknown**

1.Convent 4.Seller 7.
2.FHA/VA 5.Private 8.
3.Assumed 6.Cash 9.Unknown

Validity **1 Arms Length Sale**

1.Valid 4.Split 7.Multiple
2.Related 5.Partial 8.Other
3.Distress 6.Exempt 9.Estate

Verified **5 Public Record**

1.Buyer 4.Agent 7.Family
2.Seller 5.Pub Rec 8.Other
3.Lender 6.MLS 9.

Assessment Record

Year	Land	Buildings	Exempt	Total
2011	48,000	152,171	8,500	191,671
2012	48,000	152,171	8,500	191,671
2013	48,000	152,171	8,500	191,671
2014	48,000	155,249	8,500	194,749
2015	48,000	155,200	9,000	194,200
2016	48,900	155,200	0	204,100
2017	48,900	155,200	0	204,100
2018	48,900	155,200	18,000	186,100
2019	76,200	198,700	20,000	254,900
2020	76,200	198,700	20,000	254,900
2021	76,200	198,700	25,000	249,900
2022	76,200	198,700	25,000	249,900
2023	76,200	226,200	25,000	277,400
Calc.	137,400	343,600	25,000	456,000

Land Data

Front Foot

11.Water (0-200)
12.Water (201-400
13.Water (401-800
14.Water (801-160
15.Water (1601-32

Square Foot

16.Water(3201-
17.Water SF Ameni
18.Water View
19.Water Influenc
20.ShoreFront A

Fract. Acre

21.Base Lot
22.Base Lot Vacan
23.Base Lot Unpav

Acres

24.Acres to 10
25.Acres 11-30
26.Acres 31-50
27.Acres 51& over
28.Acres 71 & Ove
29.Woods (41+)

Type	Effective Frontage	Effective Depth	Influence Factor	Influence Code
			%	
			%	
			%	
			%	
			%	
			%	
			%	
Square Feet				
			%	
			%	
			%	
			%	
			%	
			%	
			%	
Acreage/Sites				
21	1.84		100 %	0
24	2.06		100 %	0
			%	
			%	
			%	
			%	
			%	

Total Acreage 3.90

Influence Codes

1.Unimproved
2.Excess Frtg
3.Topography
4.Size/Shape
5.Access
6.Restriction
7.Open Space
8.Environmental
9.Condo

Acres

30.Blueberry(1-20
31.Blueberry(21 -
32.Crop Land
33.Pasture
34.Shorefront B
35.Shorefront C
36.ANTENNA SITE
37.Softwood TG
38.Mixed Wood TG
39.Hardwood TG
40.Wasteland
41.Woodland
42.Mobile Home Si
43.Camp Site
44.Lot Improvemen
45.BA SF - Oce
46.SP Meadow Cond

Proposed Value

Gray

Map Lot 053-043-008-005 | Account 2729 | Location 282 YARMOUTH RD | Card 1 Of 1 | 8/05/2024

Building Style	**4 Cape Cod**		
1.Conv.	5.Garrison	9.NE farm	
2.Ranch	6.Split	10.Colonia	
3.R Ranch/	7.Contemp	11.Cottage	
4.Cape	8.Log	12.Gambrel	
Dwelling Units	**1**		
Other Units	**0**		
Stories	**5 One & 3/4 Story**		
1.1	4.1.5	7.	
2.2	5.1.75	8.	
3.3	6.2.5	9.	
Exterior Walls	**1 Clapboard**		
1.Clapboar	5.Stucco	9.B & B	
2.Vin/Al	6.Brick	10.Cemplan	
3.Compos./	7.Stone	11.Concret	
4.Asbestos	8.Wood Shi	12.Wood Bo	
Roof Surface	**1 Asphalt Shingles**		
1.Asphalt	4.Composit	7.Other	
2.Slate	5.Wood	8.	
3.Metal	6.Roll Roo	9.	
SF Masonry Trim	**0**		
SOLAR VOLTAIC	**0**		
OPEN-4-	**0**		
Year Built	**1986**		
Year Remodeled	**0**		
Foundation	**1 Concrete**		
1.Concrete	4.Wood	7.	
2.C Block	5.Slab	8.	
3.Br/Stone	6.Piers	9.	
Basement	**4 Full Basement**		
1.1/4 Bmt	4.Full Bmt	7.	
2.1/2 Bmt	5.Crwl	8.	
3.3/4 Bmt	6.	9.None	
Bsmt Gar # Cars	**0**		
Wet Basement	**1 Dry Basement**		
1.Dry	4.	7.	
2.Damp	5.	8.	
3.Wet	6.	9.	

SF Bsmt Living	**0**		
Fin Bsmt Grade	**0 0**		
Secondary Heat	**0**		
Heat Type	**100%**	**1 Hot Water BB**	
1.HWBB	5.FWA	9.None	
2.HWCI	6.Monitor	10.UNH2F	
3.HWRF	7.Electric	11.Geother	
4.Steam	8.Fl/Wall	12.Heat/Co	
Cool Type	**0%**	**9 None**	
1.Central	4.W&C Air	7.	
2.Evapor	5.	8.	
3.H Pump	6.	9.None	
Kitchen Style	**2 Typical**		
1.Modern	4.Obsolete	7.	
2.Typical	5.	8.	
3.Old Type	6.	9.None	
Bath(s) Style	**2 Typical Bath(s)**		
1.Modern	4.Obsolete	7.	
2.Typical	5.	8.	
3.Old Type	6.	9.None	
# Rooms	**6**		
# Bedrooms	**3**		
# Full Baths	**1**		
# Half Baths	**1**		
# Addn Fixtures	**0**		
# Fireplaces	**1**		

TRIO

Layout	**1 Typical**		
1.Typical	4.	7.	
2.Inadeq	5.	8.	
3.	6.	9.	
Attic	**9 None**		
1.1/4 Fin	4.Full Fin	7.	
2.1/2 Fin	5.Fl/Stair	8.	
3.3/4 Fin	6.	9.None	
Insulation	**1 Full**		
1.Full	4.Minimal	7.	
2.Heavy	5.	8.	
3.Capped	6.	9.None	
Unfinished %	**0%**		
Grade & Factor	**3 Average 110%**		
1.E Grade	4.B Grade	7.SC Grade	
2.D Grade	5.A Grade	8.	
3.C Grade	6.AA Grade	9.Same	
SQFT (Footprint)	**864**		
Condition	**4 Average**		
1.Poor	4.Avg	7.V G	
2.Fair	5.Avg+	8.Exc	
3.Avg-	6.Good	9.Same	
Phys. % Good	**0%**		
Funct. % Good	**100%**		
Functional Code	**9 None**		
1.Incomp	4.Delap	7.Layout	
2.O-Built	5.Bsmt	8.Long Term	
3.Damage	6.Style	9.None	
Econ. % Good	**100%**		
Economic Code	**None**		
0.None	3.No Power	6.Obsolete	
1.Location	4.Generate	9.None	
2.Encroach	5.Flood Pl	9.	
Entrance Code	**5 Estimated**		
1.Interior	4.Vacant	7.	
2.Refusal	5.Estimate	8.	
3.Informed	6.	9.	
Information Code	**5 Estimate**		
1.Owner	4.Agent	7.	
2.Relative	5.Estimate	8.	
3.Tenant	6.Other	9.	

Date Inspected 5/28/2024

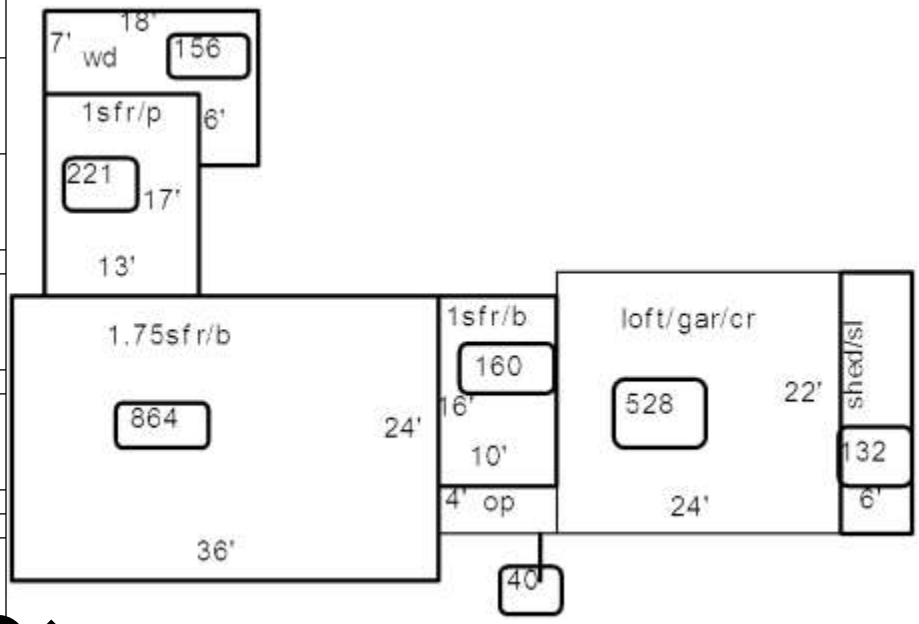

Additions, Outbuildings & Improvements

Type	Year	Units	Grade	Cond	Phys.	Funct.	Sound Value
11 1 Story/Basement	0	160	0 0	0	0 %	100 %	
1 One Story Frame	1999	221	0 0	0	0 %	100 %	
21 Open Frame	1999	40	0 0	0	0 %	100 %	
68 Wood Deck	1999	156	0 0	0	0 %	100 %	
24 Frame Shed	0	132	0 0	0	0 %	100 %	
73 1.25 St Garage	0	528	0 0	0	0 %	100 %	
					%	%	
					%	%	
					%	%	
					%	%	

1.One Story Fram
2.Two Story Fram
3.Three Story Fr
4.1 & 1/2 Story
5.1 & 3/4 Story
6.2 & 1/2 Story
21.Open Frame Por
22.Encl Frame Por
23.Frame Garage
24.Frame Shed
25.Frame Bay Wind
26.1SFr Overhang
27.Unfin Basement
28.Unfinished Att
29.Finished Attic

Proposed Value