Map Lot 053-043-008-001 Account 2725 Location 19 MOOSE X-ING Card 1 Of 1 8/05/2024

FRENCH, JOSEPH DANNY
FRENCH, AVERY MCCALL
19 MOOSE CROSSING
GRAY ME 04039

B40084P332

Previous Owner
SONRISE HOMES LLC
3 COTTAGE LANE

NEW GLOUCESTER ME 04260
Sale Date: 4/21/2023

Previous Owner
GREEN MOUNTAIN HOLDINGS (CAYMAN) LTD
1688 MERIDAN AVE
7TH FLOOR
MIAMI BEACH FL 33139
Sale Date: 12/29/2022

Previous Owner
ESTATE OF PRISCILLA E LIBBEY

Sale Date: 12/29/2022

Inspection Witnessed By:

X Date

No./Date	Description	Date Insp.

Notes:
5/24 DR FIELD REVIEW

Gray

Property Data

Neighborhood **82 Average Location**

Tree Growth Year **0**

REVIEW **0**

Bulding Permit **0**

Zone/Land Use **11 Rural Residential & Agri**

Secondary Zone

Topography **2 Rolling**

1.Level 4.Below St 7.
2.Rolling 5.Low 8.
3.Above St 6.Swampy 9.

Utilities **2 Public Water** **6 Septic System**

1.Public 4.Drilled Well/Po 7.Cesspool
2.Water 5.Dug Well 8.Lake
3.Holding Ta 6.Septic 9.None

Street **3 Gravel**

1.Paved 4.Proposed
2.Semi Imp 5.R/O/W 8.
3.Gravel 6. 9.None

GIS Map **53**

Field Review **1**

Sale Data

Sale Date **4/21/2023**

Price **335,700**

Sale Type **2 Land & Buildings**

1.Land 4.Mobile 7.COM
2.L & B 5.Other 8.
3.Building 6.Condo 9.

Financing **1 Conventional**

1.Convent 4.Seller 7.
2.FHA/VA 5.Private 8.
3.Assumed 6.Cash 9.Unknown

Validity **1 Arms Length Sale**

1.Valid 4.Split 7.Multiple
2.Related 5.Partial 8.Other
3.Distress 6.Exempt 9.Estate

Verified **5 Public Record**

1.Buyer 4.Agent 7.Family
2.Seller 5.Pub Rec 8.Other
3.Lender 6.MLS 9.

Assessment Record

Year	Land	Buildings	Exempt	Total
2011	58,400	58,770	8,500	108,670
2012	58,400	58,770	8,500	108,670
2013	58,400	58,770	8,500	108,670
2014	58,400	58,770	13,600	103,570
2015	58,400	58,800	14,400	102,800
2016	58,400	58,800	14,400	102,800
2017	58,400	60,100	18,900	99,600
2018	58,400	60,100	23,400	95,100
2019	59,700	112,300	26,000	146,000
2020	59,700	112,300	26,000	146,000
2021	59,700	112,300	31,000	141,000
2022	59,700	112,300	31,000	141,000
2023	59,700	131,700	0	191,400
Calc.	129,400	164,800	0	294,200

Land Data

Front Foot

11.Water (0-200)
12.Water (201-400
13.Water (401-800
14.Water (801-160
15.Water (1601-32

Square Foot

16.Water(3201-
17.Water SF Ameni
18.Water View
19.Water Influenc
20.ShoreFront A

Fract. Acre

21.Base Lot
22.Base Lot Vacan
23.Base Lot Unpav

Acres

24.Acres to 10
25.Acres 11-30
26.Acres 31-50
27.Acres 51& over
28.Acres 71 & Ove
29.Woods (41+)

Type	Effective Frontage	Effective Depth	Influence Factor	Influence Code
			%	
			%	
			%	
			%	
			%	
			%	
			%	
Square Feet				
			%	
			%	
			%	
			%	
			%	
			%	
			%	
Acreage/Sites				
23	1.84		100 %	0
24	1.56		100 %	0
			%	
			%	
			%	
			%	
			%	

Total Acreage 3.40

Influence Codes

1.Unimproved
2.Excess Frtg
3.Topography
4.Size/Shape
5.Access
6.Restriction
7.Open Space
8.Environmental
9.Condo

Acres

30.Blueberry(1-20
31.Blueberry(21 -
32.Crop Land
33.Pasture
34.Shorefront B
35.Shorefront C
36.ANTENNA SITE
37.Softwood TG
38.Mixed Wood TG
39.Hardwood TG
40.Wasteland
41.Woodland
42.Mobile Home Si
43.Camp Site
44.Lot Improvemen
45.BA SF - Oce
46.SP Meadow Cond

Proposed Value

Gray

Map Lot 053-043-008-001 | Account 2725 | Location 19 MOOSE X-ING | Card 1 Of 1 | 8/05/2024

Building Style **2 Ranch**		
1.Conv.	5.Garrison	9.NE farm
2.Ranch	6.Split	10.Colonia
3.R Ranch/	7.Contemp	11.Cottage
4.Cape	8.Log	12.Gambrel
Dwelling Units **1**		
Other Units **0**		
Stories **1 One Story**		
1.1	4.1.5	7.
2.2	5.1.75	8.
3.3	6.2.5	9.
Exterior Walls **1 Clapboard**		
1.Clapboar	5.Stucco	9.B & B
2.Vin/Al	6.Brick	10.Cemplan
3.Compos./	7.Stone	11.Concret
4.Asbestos	8.Wood Shi	12.Wood Bo
Roof Surface **3 Metal**		
1.Asphalt	4.Composit	7.Other
2.Slate	5.Wood	8.
3.Metal	6.Roll Roo	9.
SF Masonry Trim **0**		
SOLAR VOLTAIC **0**		
OPEN-4- **0**		
Year Built **1986**		
Year Remodeled **0**		
Foundation **1 Concrete**		
1.Concrete	4.Wood	7.
2.C Block	5.Slab	8.
3.Br/Stone	6.Piers	9.
Basement **4 Full Basement**		
1.1/4 Bmt	4.Full Bmt	7.
2.1/2 Bmt	5.Crwl	8.
3.3/4 Bmt	6.	9.None
Bsmt Gar # Cars **0**		
Wet Basement **1 Dry Basement**		
1.Dry	4.	7.
2.Damp	5.	8.
3.Wet	6.	9.

SF Bsmt Living **0**		
Fin Bsmt Grade **0 0**		
Secondary Heat **0**		
Heat Type **100%** **5 Forced Warm Air**		
1.HWBB	5.FWA	9.None
2.HWCI	6.Monitor	10.UNH2F
3.HWRF	7.Electric	11.Geother
4.Steam	8.Fl/Wall	12.Heat/Co
Cool Type **0%** **9 None**		
1.Central	4.W&C Air	7.
2.Evapor	5.	8.
3.H Pump	6.	9.None
Kitchen Style **1 Modern**		
1.Modern	4.Obsolete	7.
2.Typical	5.	8.
3.Old Type	6.	9.None
Bath(s) Style **2 Typical Bath(s)**		
1.Modern	4.Obsolete	7.
2.Typical	5.	8.
3.Old Type	6.	9.None
# Rooms **4**		
# Bedrooms **2**		
# Full Baths **1**		
# Half Baths **0**		
# Addn Fixtures **0**		
# Fireplaces **0**		

TRIO

Layout **1 Typical**		
1.Typical	4.	7.
2.Inadeq	5.	8.
3.	6.	9.
Attic **9 None**		
1.1/4 Fin	4.Full Fin	7.
2.1/2 Fin	5.Fl/Stair	8.
3.3/4 Fin	6.	9.None
Insulation **1 Full**		
1.Full	4.Minimal	7.
2.Heavy	5.	8.
3.Capped	6.	9.None
Unfinished % **0%**		
Grade & Factor **3 Average 100%**		
1.E Grade	4.B Grade	7.SC Grade
2.D Grade	5.A Grade	8.
3.C Grade	6.AA Grade	9.Same
SQFT (Footprint) **768**		
Condition **7 Very Good**		
1.Poor	4.Avg	7.V G
2.Fair	5.Avg+	8.Exc
3.Avg-	6.Good	9.Same
Phys. % Good **0%**		
Funct. % Good **100%**		
Functional Code **9 None**		
1.Incomp	4.Delap	7.Layout
2.O-Built	5.Bsmt	8.Long Term
3.Damage	6.Style	9.None
Econ. % Good **100%**		
Economic Code **None**		
0.None	3.No Power	6.Obsolete
1.Location	4.Generate	9.None
2.Encroach	5.Flood Pl	9.
Entrance Code **5 Estimated**		
1.Interior	4.Vacant	7.
2.Refusal	5.Estimate	8.
3.Informed	6.	9.
Information Code **5 Estimate**		
1.Owner	4.Agent	7.
2.Relative	5.Estimate	8.
3.Tenant	6.Other	9.

Date Inspected 5/28/2024

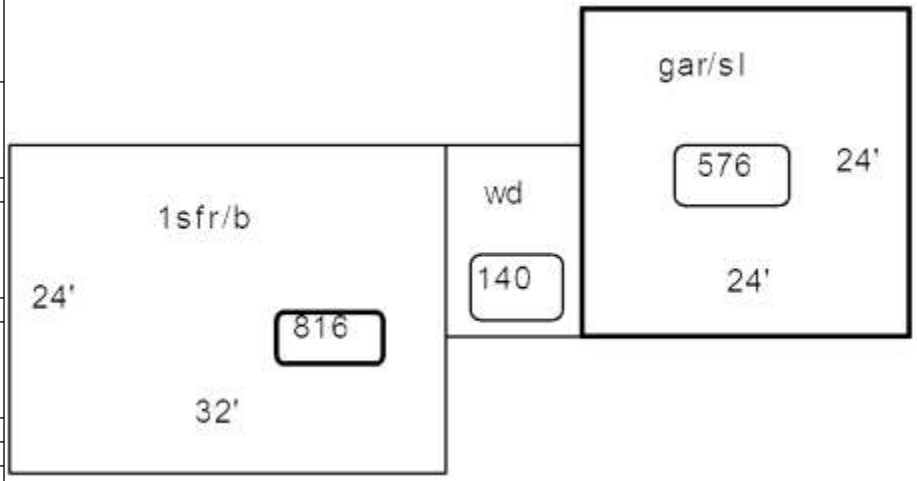

Additions, Outbuildings & Improvements

Type	Year	Units	Grade	Cond	Phys.	Funct.	Sound Value
23 Frame Garage	0	576	3 100	3	0 %	100 %	
68 Wood Deck	0	140	0 0	0	0 %	100 %	
					%	%	
					%	%	
					%	%	
					%	%	
					%	%	
					%	%	
					%	%	
					%	%	

1.One Story Fram
2.Two Story Fram
3.Three Story Fr
4.1 & 1/2 Story
5.1 & 3/4 Story
6.2 & 1/2 Story
21.Open Frame Por
22.Encl Frame Por
23.Frame Garage
24.Frame Shed
25.Frame Bay Wind
26.1SFr Overhang
27.Unfin Basement
28.Unfinished Att
29.Finished Attic

Proposed Value