Map Lot 041-303-284-011 Account 3513 Location 23 CHESTNUT HEIGHTS RD Card 1 Of 1 8/05/2024

MCNALLY, SEAN F
MCNALLY, BETHANY A
23 CHESTNUT HEIGHTS ROAD
GRAY ME 04039

B38651P274

Previous Owner
GALLO, SARAH E
BURTON, STACIE E
23 CHESTNUT HEIGHTS RD
GRAY ME 04039
Sale Date: 9/13/2021

Previous Owner
WHITTIER, KATHERINE A
BARNES, JONATHAN T
184 RICKER ROAD
NEW GLOUCESTER ME 04260
Sale Date: 3/30/2018

Inspection Witnessed By:

X Date

No./Date	Description	Date Insp.

Notes:

5/24- DR FIELD REVIEW. UNDERGROUND UTIL. PAVED WITH SIDEWALK

Gray

Property Data

Neighborhood **84 Good Location**

Tree Growth Year **0**

REVIEW **0**

Bulding Permit **0**

Zone/Land Use **23 Lake District**

Secondary Zone **11 Rural Res & Ag**

Topography **2 Rolling**

1.Level 4.Below St 7.
2.Rolling 5.Low 8.
3.Above St 6.Swampy 9.

Utilities **5 Dug Well** **6 Septic System**

1.Public 4.Drilled Well/Po 7.Cesspool
2.Water 5.Dug Well 8.Lake
3.Holding Ta 6.Septic 9.None

Street **1 Paved**

1.Paved 4.Proposed
2.Semi Imp 5.R/O/W 8.
3.Gravel 6. 9.None

GIS Map **40**

Field Review **1**

Sale Data

Sale Date **9/13/2021**

Price **465,000**

Sale Type **2 Land & Buildings**

1.Land 4.Mobile 7.COM
2.L & B 5.Other 8.
3.Building 6.Condo 9.

Financing **1 Conventional**

1.Convent 4.Seller 7.
2.FHA/VA 5.Private 8.
3.Assumed 6.Cash 9.Unknown

Validity **1 Arms Length Sale**

1.Valid 4.Split 7.Multiple
2.Related 5.Partial 8.Other
3.Distress 6.Exempt 9.Estate

Verified **5 Public Record**

1.Buyer 4.Agent 7.Family
2.Seller 5.Pub Rec 8.Other
3.Lender 6.MLS 9.

Assessment Record

Year	Land	Buildings	Exempt	Total
2011	20,475	0	0	20,475
2012	20,475	0	0	20,475
2013	20,475	0	0	20,475
2014	20,475	0	0	20,475
2015	20,500	0	0	20,500
2016	41,000	0	0	41,000
2017	59,000	171,300	0	230,300
2018	59,000	171,300	0	230,300
2019	90,600	232,700	0	323,300
2020	90,600	233,900	0	324,500
2021	90,600	233,900	0	324,500
2022	90,600	242,200	0	332,800
2023	90,600	277,700	0	368,300
Calc.	154,400	396,300	0	550,700

Land Data

Front Foot

11.Water (0-200)
12.Water (201-400
13.Water (401-800
14.Water (801-160
15.Water (1601-32

Square Foot

16.Water(3201-
17.Water SF Ameni
18.Water View
19.Water Influenc
20.ShoreFront A

Fract. Acre

21.Base Lot
22.Base Lot Vacan
23.Base Lot Unpav

Acres

24.Acres to 10
25.Acres 11-30
26.Acres 31-50
27.Acres 51& over
28.Acres 71 & Ove
29.Woods (41+)

Type	Effective Frontage	Effective Depth	Influence Factor	Influence Code
			%	
			%	
			%	
			%	
			%	
			%	
			%	
Square Feet				
			%	
			%	
			%	
			%	
			%	
			%	
			%	
Acreage/Sites				
21	1.00		100 %	0
24	0.19		100 %	0
			%	
			%	
			%	
			%	
			%	

Total Acreage 1.19

Influence Codes

1.Unimproved
2.Excess Frtg
3.Topography
4.Size/Shape
5.Access
6.Restriction
7.Open Space
8.Environmental
9.Condo

Acres

30.Blueberry(1-20
31.Blueberry(21 -
32.Crop Land
33.Pasture
34.Shorefront B
35.Shorefront C
36.ANTENNA SITE
37.Softwood TG
38.Mixed Wood TG
39.Hardwood TG
40.Wasteland
41.Woodland
42.Mobile Home Si
43.Camp Site
44.Lot Improvemen
45.BA SF - Oce
46.SP Meadow Cond

Proposed Value

Gray

Map Lot 041-303-284-011 | Account 3513 | Location 23 CHESTNUT HEIGHTS RD | Card 1 Of 1 | 8/05/2024

Building Style	**10 Colonial**	
1.Conv.	5.Garrison	9.NE farm
2.Ranch	6.Split	10.Colonia
3.R Ranch/	7.Contemp	11.Cottage
4.Cape	8.Log	12.Gambrel
Dwelling Units	**1**	
Other Units	**0**	
Stories	**2 Two Story**	
1.1	4.1.5	7.
2.2	5.1.75	8.
3.3	6.2.5	9.
Exterior Walls	**2 Vinyl/Aluminum**	
1.Clapboar	5.Stucco	9.B & B
2.Vin/Al	6.Brick	10.Cemplan
3.Compos./	7.Stone	11.Concret
4.Asbestos	8.Wood Shi	12.Wood Bo
Roof Surface	**1 Asphalt Shingles**	
1.Asphalt	4.Composit	7.Other
2.Slate	5.Wood	8.
3.Metal	6.Roll Roo	9.
SF Masonry Trim	**0**	
SOLAR VOLTAIC	**0**	
OPEN-4-	**0**	
Year Built	**2015**	
Year Remodeled	**0**	
Foundation	**1 Concrete**	
1.Concrete	4.Wood	7.
2.C Block	5.Slab	8.
3.Br/Stone	6.Piers	9.
Basement	**4 Full Basement**	
1.1/4 Bmt	4.Full Bmt	7.
2.1/2 Bmt	5.Crwl	8.
3.3/4 Bmt	6.	9.None
Bsmt Gar # Cars	**0**	
Wet Basement	**1 Dry Basement**	
1.Dry	4.	7.
2.Damp	5.	8.
3.Wet	6.	9.

SF Bsmt Living	**0**	
Fin Bsmt Grade	**0 0**	
Secondary Heat	**0**	
Heat Type	**100%**	**1 Hot Water BB**
1.HWBB	5.FWA	9.None
2.HWCI	6.Monitor	10.UNH2F
3.HWRF	7.Electric	11.Geother
4.Steam	8.Fl/Wall	12.Heat/Co
Cool Type	**0%**	**9 None**
1.Central	4.W&C Air	7.
2.Evapor	5.	8.
3.H Pump	6.	9.None
Kitchen Style	**2 Typical**	
1.Modern	4.Obsolete	7.
2.Typical	5.	8.
3.Old Type	6.	9.None
Bath(s) Style	**2 Typical Bath(s)**	
1.Modern	4.Obsolete	7.
2.Typical	5.	8.
3.Old Type	6.	9.None
# Rooms	**6**	
# Bedrooms	**3**	
# Full Baths	**2**	
# Half Baths	**1**	
# Addn Fixtures	**1**	
# Fireplaces	**0**	

TRIO

Layout	**1 Typical**	
1.Typical	4.	7.
2.Inadeq	5.	8.
3.	6.	9.
Attic	**9 None**	
1.1/4 Fin	4.Full Fin	7.
2.1/2 Fin	5.Fl/Stair	8.
3.3/4 Fin	6.	9.None
Insulation	**1 Full**	
1.Full	4.Minimal	7.
2.Heavy	5.	8.
3.Capped	6.	9.None
Unfinished %	**0%**	
Grade & Factor	**3 Average 120%**	
1.E Grade	4.B Grade	7.SC Grade
2.D Grade	5.A Grade	8.
3.C Grade	6.AA Grade	9.Same
SQFT (Footprint)	**732**	
Condition	**4 Average**	
1.Poor	4.Avg	7.V G
2.Fair	5.Avg+	8.Exc
3.Avg-	6.Good	9.Same
Phys. % Good	**0%**	
Funct. % Good	**100%**	
Functional Code	**9 None**	
1.Incomp	4.Delap	7.Layout
2.O-Built	5.Bsmt	8.Long Term
3.Damage	6.Style	9.None
Econ. % Good	**100%**	
Economic Code	**None**	
0.None	3.No Power	6.Obsolete
1.Location	4.Generate	9.None
2.Encroach	5.Flood Pl	9.
Entrance Code	**5 Estimated**	
1.Interior	4.Vacant	7.
2.Refusal	5.Estimate	8.
3.Informed	6.	9.
Information Code	**5 Estimate**	
1.Owner	4.Agent	7.
2.Relative	5.Estimate	8.
3.Tenant	6.Other	9.

Date Inspected 5/24/2024

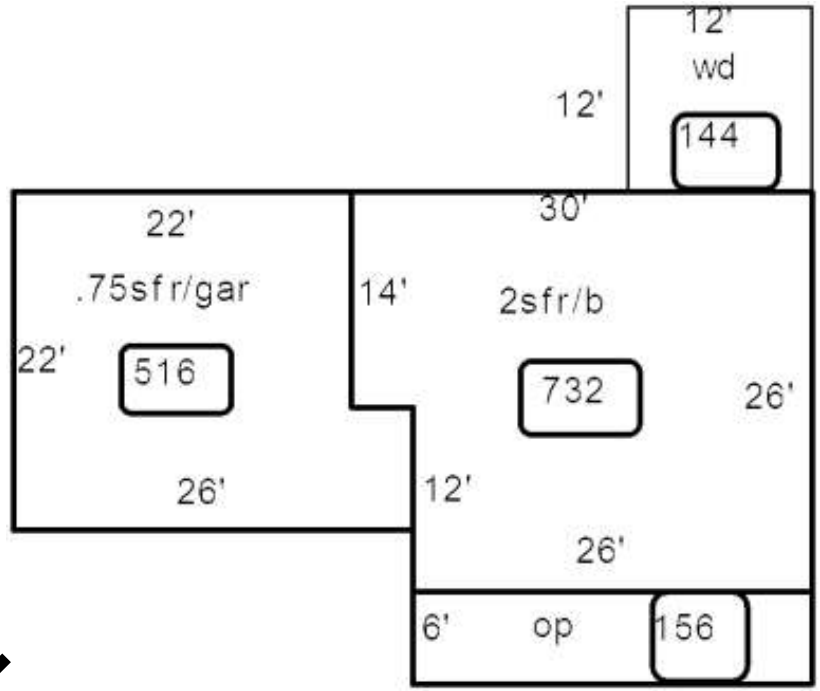

Proposed Value

Additions, Outbuildings & Improvements

Type	Year	Units	Grade	Cond	Phys.	Funct.	Sound Value
21 Open Frame	2015	156	4 100	4	0 %	100 %	
68 Wood Deck	0	144	0 0	0	0 %	100 %	
23 Frame Garage	2015	516	4 100	4	0 %	100 %	
80 3/4 St/Garage	2017	516	4 100	4	0 %	100 %	
24 Frame Shed	2018	120	3 100	4	0 %	100 %	
					%	%	
					%	%	
					%	%	
					%	%	
					%	%	

1.One Story Fram
2.Two Story Fram
3.Three Story Fr
4.1 & 1/2 Story
5.1 & 3/4 Story
6.2 & 1/2 Story
21.Open Frame Por
22.Encl Frame Por
23.Frame Garage
24.Frame Shed
25.Frame Bay Wind
26.1SFr Overhang
27.Unfin Basement
28.Unfinished Att
29.Finished Attic