Map Lot 040-317-036-001 Account 4207 Location 74 NORTHERN OAKS DR Card 1 Of 1 8/05/2024

GASCOYNE, EMILY B
151 WENTWORTH STREET
CHARLESTON SC 29401

B37679P21

Previous Owner
GASCOYNE, PETER D
GASCOYNE, EMILY B
151 WENTWORTH STREET
CHARLESTON SC 29401
Sale Date: 1/11/2021

Inspection Witnessed By:

X Date

No./Date	Description	Date Insp.

Notes:

Gray

Property Data

Neighborhood **5 Little Sebago**

Tree Growth Year **0**

REVIEW **0**

Bulding Permit **0**

Zone/Land Use **12 Limited Residential**

Secondary Zone **23 Lake District**

Topography **2 Rolling**

1.Level 4.Below St 7.
2.Rolling 5.Low 8.
3.Above St 6.Swampy 9.

Utilities **4 Drilled Well/Point** **6 Septic System**

1.Public 4.Dr Well/Po 7.Cesspool
2.Water 5.Dug Well 8.Lake
3.Holding Ta 6.Septic 9.None

Street **3 Gravel**

1.Paved 4.Proposed
2.Semi Imp 5.R/O/W 8.
3.Gravel 6. 9.None

GIS Map **40**

Field Review **0**

Sale Data

Sale Date **1/11/2021**

Price

Sale Type **2 Land & Buildings**

1.Land 4.Mobile 7.COM
2.L & B 5.Other 8.
3.Building 6.Condo 9.

Financing **9 Unknown**

1.Convent 4.Seller 7.
2.FHA/VA 5.Private 8.
3.Assumed 6.Cash 9.Unknown

Validity **2 Related Parties**

1.Valid 4.Split 7.Multiple
2.Related 5.Partial 8.Other
3.Distress 6.Exempt 9.Estate

Verified **5 Public Record**

1.Buyer 4.Agent 7.Family
2.Seller 5.Pub Rec 8.Other
3.Lender 6.MLS 9.

Assessment Record

Year	Land	Buildings	Exempt	Total
2011	42,360	1,132	0	43,492
2012	42,360	1,132	0	43,492
2013	42,360	1,132	0	43,492
2014	42,360	1,132	0	43,492
2015	42,400	1,100	0	43,500
2016	42,400	1,100	0	43,500
2017	42,400	1,100	0	43,500
2018	42,400	1,100	0	43,500
2019	44,500	1,000	0	45,500
2020	44,500	1,000	0	45,500
2021	44,500	1,000	0	45,500
2022	44,500	1,000	0	45,500
2023	44,500	62,500	0	107,000
Calc.	115,000	125,100	0	240,100

Land Data

Front Foot

11.Water (0-200)
12.Water (201-400
13.Water (401-800
14.Water (801-160
15.Water (1601-32

Square Foot

16.Water(3201-
17.Water SF Ameni
18.Water View
19.Water Influenc
20.ShoreFront A

Fract. Acre

21.Base Lot
22.Base Lot Vacan
23.Base Lot Unpav

Acres

24.Acres to 10
25.Acres 11-30
26.Acres 31-50
27.Acres 51& over
28.Acres 71 & Ove
29.Woods (41+)

Type	Effective Frontage	Effective Depth	Influence Factor	Influence Code
			%	
			%	
			%	
			%	
			%	
			%	
			%	
Square Feet				
			%	
			%	
			%	
			%	
			%	
			%	
			%	
Acreage/Sites				
23	0.37		80 %	1
			%	
			%	
			%	
			%	
			%	
			%	

Total Acreage 0.37

Influence Codes

1.Unimproved
2.Excess Frtg
3.Topography
4.Size/Shape
5.Access
6.Restriction
7.Open Space
8.Environmental
9.Condo

Acres

30.Blueberry(1-20
31.Blueberry(21 -
32.Crop Land
33.Pasture
34.Shorefront B
35.Shorefront C
36.ANTENNA SITE
37.Softwood TG
38.Mixed Wood TG
39.Hardwood TG
40.Wasteland
41.Woodland
42.Mobile Home Si
43.Camp Site
44.Lot Improvemen
45.BA SF - Oce
46.SP Meadow Cond

Proposed Value

Gray

Map Lot 040-317-036-001 | Account 4207 | Location 74 NORTHERN OAKS DR | Card 1 Of 1 | 8/05/2024

Building Style	**2 Ranch**		
1.Conv.	5.Garrison	9.NE farm	
2.Ranch	6.Split	10.Colonia	
3.R Ranch/	7.Contemp	11.Cottage	
4.Cape	8.Log	12.Gambrel	
Dwelling Units	**1**		
Other Units	**0**		
Stories	**1 One Story**		
1.1	4.1.5	7.	
2.2	5.1.75	8.	
3.3	6.2.5	9.	
Exterior Walls	**2 Vinyl/Aluminum**		
1.Clapboar	5.Stucco	9.B & B	
2.Vin/Al	6.Brick	10.Cemplan	
3.Compos./	7.Stone	11.Concret	
4.Asbestos	8.Wood Shi	12.Wood Bo	
Roof Surface	**1 Asphalt Shingles**		
1.Asphalt	4.Composit	7.Other	
2.Slate	5.Wood	8.	
3.Metal	6.Roll Roo	9.	
SF Masonry Trim	**0**		
SOLAR VOLTAIC	**0**		
OPEN-4-	**0**		
Year Built	**1954**		
Year Remodeled	**2022**		
Foundation	**1 Concrete**		
1.Concrete	4.Wood	7.	
2.C Block	5.Slab	8.	
3.Br/Stone	6.Piers	9.	
Basement	**4 Full Basement**		
1.1/4 Bmt	4.Full Bmt	7.	
2.1/2 Bmt	5.Crwl	8.	
3.3/4 Bmt	6.	9.None	
Bsmt Gar # Cars	**1**		
Wet Basement	**1 Dry Basement**		
1.Dry	4.	7.	
2.Damp	5.	8.	
3.Wet	6.	9.	

SF Bsmt Living	**0**		
Fin Bsmt Grade	**0 0**		
Secondary Heat	**0**		
Heat Type	**100%**	**14 Heat Pump**	
1.HWBB	5.FWA	9.None	
2.HWCI	6.Monitor	10.UNH2F	
3.HWRF	7.Electric	11.Geother	
4.Steam	8.Fl/Wall	12.Heat/Co	
Cool Type	**100%**	**4 Warm & Cool Air**	
1.Central	4.W&C Air	7.	
2.Evapor	5.	8.	
3.H Pump	6.	9.None	
Kitchen Style	**2 Typical**		
1.Modern	4.Obsolete	7.	
2.Typical	5.	8.	
3.Old Type	6.	9.None	
Bath(s) Style	**2 Typical Bath(s)**		
1.Modern	4.Obsolete	7.	
2.Typical	5.	8.	
3.Old Type	6.	9.None	
# Rooms	**3**		
# Bedrooms	**1**		
# Full Baths	**1**		
# Half Baths	**0**		
# Addn Fixtures	**0**		
# Fireplaces	**0**		

TRIO

Layout	**1 Typical**		
1.Typical	4.	7.	
2.Inadeq	5.	8.	
3.	6.	9.	
Attic	**9 None**		
1.1/4 Fin	4.Full Fin	7.	
2.1/2 Fin	5.Fl/Stair	8.	
3.3/4 Fin	6.	9.None	
Insulation	**1 Full**		
1.Full	4.Minimal	7.	
2.Heavy	5.	8.	
3.Capped	6.	9.None	
Unfinished %	**0%**		
Grade & Factor	**3 Average 110%**		
1.E Grade	4.B Grade	7.SC Grade	
2.D Grade	5.A Grade	8.	
3.C Grade	6.AA Grade	9.Same	
SQFT (Footprint)	**564**		
Condition	**5 Above Average**		
1.Poor	4.Avg	7.V G	
2.Fair	5.Avg+	8.Exc	
3.Avg-	6.Good	9.Same	
Phys. % Good	**0%**		
Funct. % Good	**100%**		
Functional Code	**9 None**		
1.Incomp	4.Delap	7.Layout	
2.O-Built	5.Bsmt	8.Long Term	
3.Damage	6.Style	9.None	
Econ. % Good	**100%**		
Economic Code	**None**		
0.None	3.No Power	6.Obsolete	
1.Location	4.Generate	9.None	
2.Encroach	5.Flood Pl	9.	
Entrance Code	**5 Estimated**		
1.Interior	4.Vacant	7.	
2.Refusal	5.Estimate	8.	
3.Informed	6.	9.	
Information Code	**5 Estimate**		
1.Owner	4.Agent	7.	
2.Relative	5.Estimate	8.	
3.Tenant	6.Other	9.	

Date Inspected 8/20/2015

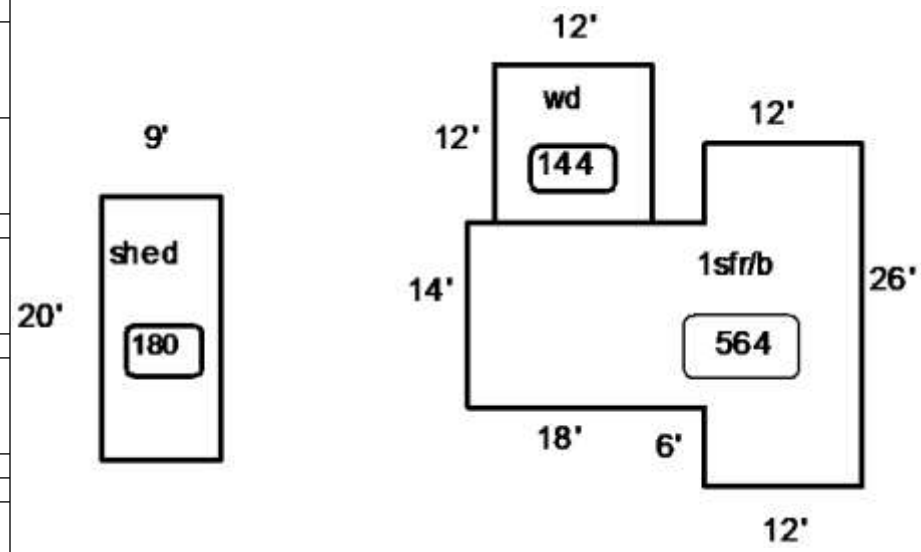

Additions, Outbuildings & Improvements

Type	Year	Units	Grade	Cond	Phys.	Funct.	Sound Value
24 Frame Shed	1970	180	2 100	4	0 %	100 %	
68 Wood Deck	2023	144	3 100	4	0 %	100 %	
					%	%	
					%	%	
					%	%	
					%	%	
					%	%	
					%	%	
					%	%	
					%	%	

1.One Story Fram
2.Two Story Fram
3.Three Story Fr
4.1 & 1/2 Story
5.1 & 3/4 Story
6.2 & 1/2 Story
21.Open Frame Por
22.Encl Frame Por
23.Frame Garage
24.Frame Shed
25.Frame Bay Wind
26.1SFr Overhang
27.Unfin Basement
28.Unfinished Att
29.Finished Attic

Proposed Value