Map Lot 027-025-022-001 Account 4670 Location 77 LEWISTON RD Card 1 Of 1 8/05/2024

TABOR, JUSTIN A
77 LEWISTON RD
GRAY ME 04039

B33552P212

Previous Owner
CHAPMAN, WILLIAM P
RAND, GREGORY S
PO BOX 983
GRAY ME 04039
Sale Date: 10/26/2016

Inspection Witnessed By:

X Date

No./Date	Description	Date Insp.

Notes:
5/24 DR FIELD REVIEW

Gray

Property Data

Neighborhood	**82 Average Location**	
Tree Growth Year	**0**	
REVIEW		**0**
Bulding Permit		**0**
Zone/Land Use	**13 Commercial**	
Secondary Zone		
Topography	**2 Rolling**	**4 Below Street**
1.Level	4.Below St	7.
2.Rolling	5.Low	8.
3.Above St	6.Swampy	9.
Utilities	**2 Public Water**	**6 Septic System**
1.Public	4.Drilled Well/Po	7.Cesspool
2.Water	5.Dug Well	8.Lake
3.Holding Ta	6.Septic	9.None
Street	**1 Paved**	
1.Paved	4.Proposed	
2.Semi Imp	5.R/O/W	8.
3.Gravel	6.	9.None
GIS Map		**0**
Field Review		**1**

Sale Data

Sale Date		**10/26/2016**
Price		**234,000**
Sale Type	**2 Land & Buildings**	
1.Land	4.Mobile	7.COM
2.L & B	5.Other	8.
3.Building	6.Condo	9.
Financing	**9 Unknown**	
1.Convent	4.Seller	7.
2.FHA/VA	5.Private	8.
3.Assumed	6.Cash	9.Unknown
Validity	**1 Arms Length Sale**	
1.Valid	4.Split	7.Multiple
2.Related	5.Partial	8.Other
3.Distress	6.Exempt	9.Estate
Verified	**5 Public Record**	
1.Buyer	4.Agent	7.Family
2.Seller	5.Pub Rec	8.Other
3.Lender	6.MLS	9.

Assessment Record

Year	Land	Buildings	Exempt	Total
2013	29,000	0	0	29,000
2014	29,020	0	0	29,020
2015	29,000	0	0	29,000
2016	29,000	0	0	29,000
2017	41,000	94,400	0	135,400
2018	41,000	118,300	0	159,300
2019	53,000	177,200	20,000	210,200
2020	53,000	177,200	20,000	210,200
2021	53,000	177,200	25,000	205,200
2022	53,000	185,200	25,000	213,200
2023	53,000	211,500	25,000	239,500
Calc.	116,800	262,700	25,000	354,500

Land Data

Front Foot	Type	Effective Frontage	Effective Depth	Influence Factor	Influence Code
11.Water (0-200)				%	
12.Water (201-400				%	
13.Water (401-800				%	
14.Water (801-160				%	
15.Water (1601-32				%	
				%	
				%	
Square Foot		**Square Feet**			
16.Water(3201-				%	
17.Water SF Ameni				%	
18.Water View				%	
19.Water Influenc				%	
20.ShoreFront A				%	
				%	
				%	
Fract. Acre		**Acreage/Sites**			
21.Base Lot	21	0.93		100 %	0
22.Base Lot Vacan				%	
23.Base Lot Unpav				%	
Acres				%	
24.Acres to 10				%	
25.Acres 11-30				%	
26.Acres 31-50				%	
27.Acres 51& over				%	
28.Acres 71 & Ove				%	
29.Woods (41+)				%	

Total Acreage 0.93

Influence Codes
1.Unimproved
2.Excess Frtg
3.Topography
4.Size/Shape
5.Access
6.Restriction
7.Open Space
8.Environmental
9.Condo
Acres
30.Blueberry(1-20
31.Blueberry(21 -
32.Crop Land
33.Pasture
34.Shorefront B
35.Shorefront C
36.ANTENNA SITE
37.Softwood TG
38.Mixed Wood TG
39.Hardwood TG
40.Wasteland
41.Woodland
42.Mobile Home Si
43.Camp Site
44.Lot Improvemen
45.BA SF - Oce
46.SP Meadow Cond

Proposed Value

Gray

Map Lot 027-025-022-001 | Account 4670 | Location 77 LEWISTON RD | Card 1 Of 1 | 8/05/2024

Building Style	**3 Raised Ranch/Split**		
1.Conv.	5.Garrison	9.NE farm	
2.Ranch	6.Split	10.Colonia	
3.R Ranch/	7.Contemp	11.Cottage	
4.Cape	8.Log	12.Gambrel	
Dwelling Units	**1**		
Other Units	**0**		
Stories	**1 One Story**		
1.1	4.1.5	7.	
2.2	5.1.75	8.	
3.3	6.2.5	9.	
Exterior Walls	**2 Vinyl/Aluminum**		
1.Clapboar	5.Stucco	9.B & B	
2.Vin/Al	6.Brick	10.Cemplan	
3.Compos./	7.Stone	11.Concret	
4.Asbestos	8.Wood Shi	12.Wood Bo	
Roof Surface	**1 Asphalt Shingles**		
1.Asphalt	4.Composit	7.Other	
2.Slate	5.Wood	8.	
3.Metal	6.Roll Roo	9.	
SF Masonry Trim	**0**		
SOLAR VOLTAIC	**0**		
OPEN-4-	**0**		
Year Built	**2016**		
Year Remodeled	**0**		
Foundation	**1 Concrete**		
1.Concrete	4.Wood	7.	
2.C Block	5.Slab	8.	
3.Br/Stone	6.Piers	9.	
Basement	**4 Full Basement**		
1.1/4 Bmt	4.Full Bmt	7.	
2.1/2 Bmt	5.Crwl	8.	
3.3/4 Bmt	6.	9.None	
Bsmt Gar # Cars	**1**		
Wet Basement	**1 Dry Basement**		
1.Dry	4.	7.	
2.Damp	5.	8.	
3.Wet	6.	9.	

SF Bsmt Living	**336**		
Fin Bsmt Grade	**4 100**		
Secondary Heat	**0**		
Heat Type	**100%**	**1 Hot Water BB**	
1.HWBB	5.FWA	9.None	
2.HWCI	6.Monitor	10.UNH2F	
3.HWRF	7.Electric	11.Geother	
4.Steam	8.Fl/Wall	12.Heat/Co	
Cool Type	**0%**	**9 None**	
1.Central	4.W&C Air	7.	
2.Evapor	5.	8.	
3.H Pump	6.	9.None	
Kitchen Style	**2 Typical**		
1.Modern	4.Obsolete	7.	
2.Typical	5.	8.	
3.Old Type	6.	9.None	
Bath(s) Style	**2 Typical Bath(s)**		
1.Modern	4.Obsolete	7.	
2.Typical	5.	8.	
3.Old Type	6.	9.None	
# Rooms	**5**		
# Bedrooms	**3**		
# Full Baths	**2**		
# Half Baths	**0**		
# Addn Fixtures	**0**		
# Fireplaces	**1**		

TRIO

Layout	**1 Typical**		
1.Typical	4.	7.	
2.Inadeq	5.	8.	
3.	6.	9.	
Attic	**9 None**		
1.1/4 Fin	4.Full Fin	7.	
2.1/2 Fin	5.Fl/Stair	8.	
3.3/4 Fin	6.	9.None	
Insulation	**1 Full**		
1.Full	4.Minimal	7.	
2.Heavy	5.	8.	
3.Capped	6.	9.None	
Unfinished %	**0%**		
Grade & Factor	**3 Average 110%**		
1.E Grade	4.B Grade	7.SC Grade	
2.D Grade	5.A Grade	8.	
3.C Grade	6.AA Grade	9.Same	
SQFT (Footprint)	**980**		
Condition	**4 Average**		
1.Poor	4.Avg	7.V G	
2.Fair	5.Avg+	8.Exc	
3.Avg-	6.Good	9.Same	
Phys. % Good	**0%**		
Funct. % Good	**100%**		
Functional Code	**9 None**		
1.Incomp	4.Delap	7.Layout	
2.O-Built	5.Bsmt	8.Long Term	
3.Damage	6.Style	9.None	
Econ. % Good	**100%**		
Economic Code	**None**		
0.None	3.No Power	6.Obsolete	
1.Location	4.Generate	9.None	
2.Encroach	5.Flood Pl	9.	
Entrance Code	**5 Estimated**		
1.Interior	4.Vacant	7.	
2.Refusal	5.Estimate	8.	
3.Informed	6.	9.	
Information Code	**5 Estimate**		
1.Owner	4.Agent	7.	
2.Relative	5.Estimate	8.	
3.Tenant	6.Other	9.	

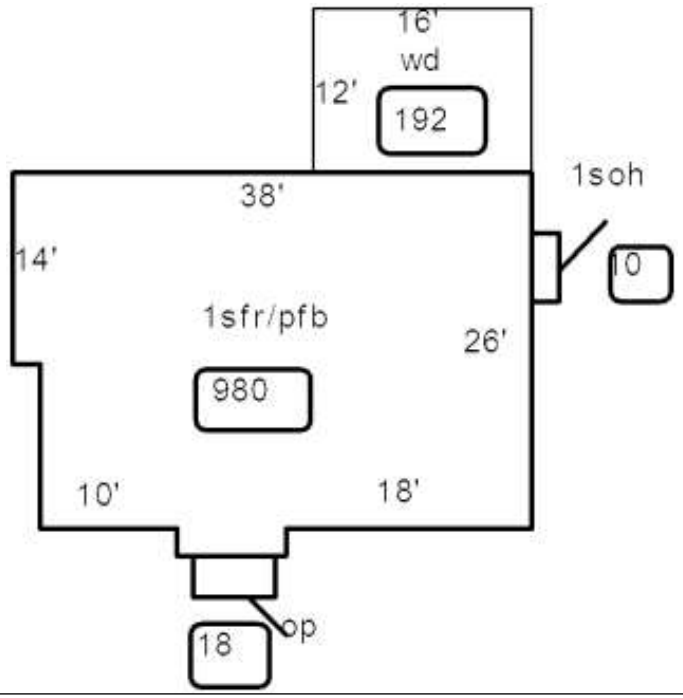

Date Inspected 5/15/2024

Additions, Outbuildings & Improvements

Type	Year	Units	Grade	Cond	Phys.	Funct.	Sound Value
1 One Story Frame	0	10	0 0	0	0 %	100 %	
21 Open Frame	0	18	0 0	0	0 %	100 %	
68 Wood Deck	0	192	0 0	0	0 %	100 %	
					%	%	
					%	%	
					%	%	
					%	%	
					%	%	
					%	%	
					%	%	

1.One Story Fram
2.Two Story Fram
3.Three Story Fr
4.1 & 1/2 Story
5.1 & 3/4 Story
6.2 & 1/2 Story
21.Open Frame Por
22.Encl Frame Por
23.Frame Garage
24.Frame Shed
25.Frame Bay Wind
26.1SFr Overhang
27.Unfin Basement
28.Unfinished Att
29.Finished Attic

Proposed Value