Map Lot 025-305-026-201 Account 4966 Location 5 BRAYSLEY WAY Card 1 Of 2 8/05/2024

RAND, GREG
RAND, JUDY
5 BRAYSLEY WAY
GRAY ME 04039

B35916P322

Inspection Witnessed By:

X Date

No./Date	Description	Date Insp.

Notes:

Gray

Property Data

Neighborhood **5 Little Sebago**

Tree Growth Year **0**

REVIEW

Bulding Permit

Zone/Land Use **23 Lake District**

Secondary Zone **12 Limited Res**

Topography **2 Rolling**

1.Level 4.Below St 7.
2.Rolling 5.Low 8.
3.Above St 6.Swampy 9.

Utilities **4 Drilled Well/Point** **6 Septic System**

1.Public 4.Dr Well/Po 7.Cesspool
2.Water 5.Dug Well 8.Lake
3.Holding Ta 6.Septic 9.None

Street **3 Gravel**

1.Paved 4.Proposed
2.Semi Imp 5.R/O/W 8.
3.Gravel 6. 9.None

GIS Map **25**

Field Review **0**

Sale Data

Sale Date **8/23/2019**

Price **150,000**

Sale Type **1 Land Only**

1.Land 4.Mobile 7.COM
2.L & B 5.Other 8.
3.Building 6.Condo 9.

Financing **9 Unknown**

1.Convent 4.Seller 7.
2.FHA/VA 5.Private 8.
3.Assumed 6.Cash 9.Unknown

Validity **4 Split/Assemblage**

1.Valid 4.Split 7.Multiple
2.Related 5.Partial 8.Other
3.Distress 6.Exempt 9.Estate

Verified **5 Public Record**

1.Buyer 4.Agent 7.Family
2.Seller 5.Pub Rec 8.Other
3.Lender 6.MLS 9.

Assessment Record

Year	Land	Buildings	Exempt	Total
2021	105,500	26,100	0	131,600
2022	144,700	151,000	0	295,700
2023	144,700	400,200	25,000	519,900
Calc.	363,200	646,600	25,000	984,800

Land Data

Front Foot

11.Water (0-200)
12.Water (201-400
13.Water (401-800
14.Water (801-160
15.Water (1601-32

Square Foot

16.Water(3201-
17.Water SF Ameni
18.Water View
19.Water Influenc
20.ShoreFront A

Fract. Acre

21.Base Lot
22.Base Lot Vacan
23.Base Lot Unpav

Acres

24.Acres to 10
25.Acres 11-30
26.Acres 31-50
27.Acres 51& over
28.Acres 71 & Ove
29.Woods (41+)

Type	Effective Frontage	Effective Depth	Influence Factor	Influence Code
			%	
			%	
			%	
			%	
			%	
			%	
			%	
Square Feet				
			%	
			%	
			%	
			%	
			%	
			%	
			%	
Acreage/Sites				
34	1.84		100 %	0
24	0.01		100 %	0
17	1.00		100 %	0
			%	
			%	
			%	
			%	

Total Acreage 1.85

Influence Codes

1.Unimproved
2.Excess Frtg
3.Topography
4.Size/Shape
5.Access
6.Restriction
7.Open Space
8.Environmental
9.Condo

Acres

30.Blueberry(1-20
31.Blueberry(21 -
32.Crop Land
33.Pasture
34.Shorefront B
35.Shorefront C
36.ANTENNA SITE
37.Softwood TG
38.Mixed Wood TG
39.Hardwood TG
40.Wasteland
41.Woodland
42.Mobile Home Si
43.Camp Site
44.Lot Improvemen
45.BA SF - Oce
46.SP Meadow Cond

Proposed Value

Gray

Map Lot 025-305-026-201 | Account 4966 | Location 5 BRAYSLEY WAY | Card 1 Of 2 | 8/05/2024

Building Style	**7 Contemporary**		
1.Conv.	5.Garrison	9.NE farm	
2.Ranch	6.Split	10.Colonia	
3.R Ranch/	7.Contemp	11.Cottage	
4.Cape	8.Log	12.Gambrel	
Dwelling Units	**1**		
Other Units	**0**		
Stories	**1 One Story**		
1.1	4.1.5	7.	
2.2	5.1.75	8.	
3.3	6.2.5	9.	
Exterior Walls	**2 Vinyl/Aluminum**		
1.Clapboar	5.Stucco	9.B & B	
2.Vin/Al	6.Brick	10.Cemplan	
3.Compos./	7.Stone	11.Concret	
4.Asbestos	8.Wood Shi	12.Wood Bo	
Roof Surface	**1 Asphalt Shingles**		
1.Asphalt	4.Composit	7.Other	
2.Slate	5.Wood	8.	
3.Metal	6.Roll Roo	9.	
SF Masonry Trim	**0**		
SOLAR VOLTAIC	**0**		
OPEN-4-	**0**		
Year Built	**2021**		
Year Remodeled	**0**		
Foundation	**1 Concrete**		
1.Concrete	4.Wood	7.	
2.C Block	5.Slab	8.	
3.Br/Stone	6.Piers	9.	
Basement	**4 Full Basement**		
1.1/4 Bmt	4.Full Bmt	7.	
2.1/2 Bmt	5.Crwl	8.	
3.3/4 Bmt	6.	9.None	
Bsmt Gar # Cars	**0**		
Wet Basement	**1 Dry Basement**		
1.Dry	4.	7.	
2.Damp	5.	8.	
3.Wet	6.	9.	

SF Bsmt Living	**1224**		
Fin Bsmt Grade	**3 100**		
Secondary Heat	**8**		
Heat Type	**100%**	**1 Hot Water BB**	
1.HWBB	5.FWA	9.None	
2.HWCI	6.Monitor	10.UNH2F	
3.HWRF	7.Electric	11.Geother	
4.Steam	8.Fl/Wall	12.Heat/Co	
Cool Type	**100%**	**4 Warm & Cool Air**	
1.Central	4.W&C Air	7.	
2.Evapor	5.	8.	
3.H Pump	6.	9.None	
Kitchen Style	**2 Typical**		
1.Modern	4.Obsolete	7.	
2.Typical	5.	8.	
3.Old Type	6.	9.None	
Bath(s) Style	**2 Typical Bath(s)**		
1.Modern	4.Obsolete	7.	
2.Typical	5.	8.	
3.Old Type	6.	9.None	
# Rooms	**10**		
# Bedrooms	**3**		
# Full Baths	**2**		
# Half Baths	**1**		
# Addn Fixtures	**2**		
# Fireplaces	**1**		

Layout	**1 Typical**		
1.Typical	4.	7.	
2.Inadeq	5.	8.	
3.	6.	9.	
Attic	**9 None**		
1.1/4 Fin	4.Full Fin	7.	
2.1/2 Fin	5.Fl/Stair	8.	
3.3/4 Fin	6.	9.None	
Insulation	**1 Full**		
1.Full	4.Minimal	7.	
2.Heavy	5.	8.	
3.Capped	6.	9.None	
Unfinished %	**0%**		
Grade & Factor	**4 Good 110%**		
1.E Grade	4.B Grade	7.SC Grade	
2.D Grade	5.A Grade	8.	
3.C Grade	6.AA Grade	9.Same	
SQFT (Footprint)	**2391**		
Condition	**4 Average**		
1.Poor	4.Avg	7.V G	
2.Fair	5.Avg+	8.Exc	
3.Avg-	6.Good	9.Same	
Phys. % Good	**0%**		
Funct. % Good	**100%**		
Functional Code	**9 None**		
1.Incomp	4.Delap	7.Layout	
2.O-Built	5.Bsmt	8.Long Term	
3.Damage	6.Style	9.None	
Econ. % Good	**100%**		
Economic Code	**None**		
0.None	3.No Power	6.Obsolete	
1.Location	4.Generate	9.None	
2.Encroach	5.Flood Pl	9.	
Entrance Code	**0**		
1.Interior	4.Vacant	7.	
2.Refusal	5.Estimate	8.	
3.Informed	6.	9.	
Information Code	**0**		
1.Owner	4.Agent	7.	
2.Relative	5.Estimate	8.	
3.Tenant	6.Other	9.	

TRIO

Date Inspected 8/25/2015

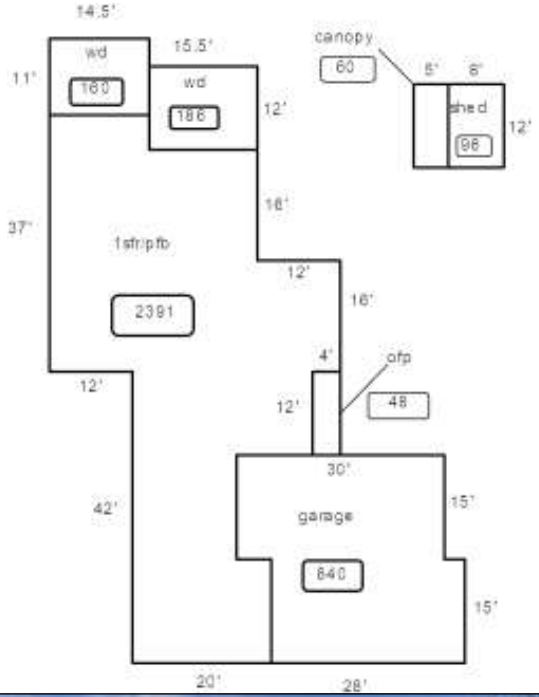

Proposed Value

Additions, Outbuildings & Improvements

Type	Year	Units	Grade	Cond	Phys.	Funct.	Sound Value
23 Frame Garage	0	840	0 0	0	0 %	100 %	
68 Wood Deck	0	160	0 0	0	0 %	100 %	
68 Wood Deck	0	186	0 0	0	0 %	100 %	
24 Frame Shed	0	96	0 0	0	0 %	100 %	
61 Canopy	0	60	0 0	0	0 %	100 %	
21 Open Frame	0	48	0 0	0	0 %	100 %	
					%	%	
					%	%	
					%	%	
					%	%	

1.One Story Fram
2.Two Story Fram
3.Three Story Fr
4.1 & 1/2 Story
5.1 & 3/4 Story
6.2 & 1/2 Story
21.Open Frame Por
22.Encl Frame Por
23.Frame Garage
24.Frame Shed
25.Frame Bay Wind
26.1SFr Overhang
27.Unfin Basement
28.Unfinished Att
29.Finished Attic

Map Lot 025-305-026-201 Account 4966 Location 5 BRAYSLEY WAY Card 2 Of 2 8/05/2024

RAND, GREG
RAND, JUDY
5 BRAYSLEY WAY
GRAY ME 04039

B35916P322

Inspection Witnessed By:

X Date

No./Date	Description	Date Insp.

Notes:

Gray

Property Data

Neighborhood **5 Little Sebago**

Tree Growth Year **0**

REVIEW

Bulding Permit

Zone/Land Use **23 Lake District**

Secondary Zone **12 Limited Res**

Topography **2 Rolling**

1.Level 4.Below St 7.
2.Rolling 5.Low 8.
3.Above St 6.Swampy 9.

Utilities **4 Drilled Well/Point** **6 Septic System**

1.Public 4.Dr Well/Po 7.Cesspool
2.Water 5.Dug Well 8.Lake
3.Holding Ta 6.Septic 9.None

Street **3 Gravel**

1.Paved 4.Proposed
2.Semi Imp 5.R/O/W 8.
3.Gravel 6. 9.None

GIS Map **25**

Field Review **0**

Sale Data

Sale Date **8/23/2019**

Price **150,000**

Sale Type **1 Land Only**

1.Land 4.Mobile 7.COM
2.L & B 5.Other 8.
3.Building 6.Condo 9.

Financing **9 Unknown**

1.Convent 4.Seller 7.
2.FHA/VA 5.Private 8.
3.Assumed 6.Cash 9.Unknown

Validity **4 Split/Assemblage**

1.Valid 4.Split 7.Multiple
2.Related 5.Partial 8.Other
3.Distress 6.Exempt 9.Estate

Verified **5 Public Record**

1.Buyer 4.Agent 7.Family
2.Seller 5.Pub Rec 8.Other
3.Lender 6.MLS 9.

Assessment Record

Year	Land	Buildings	Exempt	Total
2022	0	71,200	0	71,200
2023	0	71,200	0	71,200
Calc.	0	147,600	0	147,600

Land Data

Front Foot	Type	Effective Frontage	Effective Depth	Influence Factor	Influence Code
11.Water (0-200)				%	
12.Water (201-400				%	
13.Water (401-800				%	
14.Water (801-160				%	
15.Water (1601-32				%	
				%	
				%	
Square Foot		**Square Feet**			
16.Water(3201-				%	
17.Water SF Ameni				%	
18.Water View				%	
19.Water Influenc				%	
20.ShoreFront A				%	
				%	
				%	
Fract. Acre		**Acreage/Sites**			
21.Base Lot				%	
22.Base Lot Vacan				%	
23.Base Lot Unpav				%	
Acres				%	
24.Acres to 10				%	
25.Acres 11-30				%	
26.Acres 31-50				%	
27.Acres 51& over				%	
28.Acres 71 & Ove				%	
29.Woods (41+)				%	

Total Acreage 0.00

Influence Codes

1.Unimproved
2.Excess Frtg
3.Topography
4.Size/Shape
5.Access
6.Restriction
7.Open Space
8.Environmental
9.Condo

Acres

30.Blueberry(1-20
31.Blueberry(21 -
32.Crop Land
33.Pasture
34.Shorefront B
35.Shorefront C
36.ANTENNA SITE
37.Softwood TG
38.Mixed Wood TG
39.Hardwood TG
40.Wasteland
41.Woodland
42.Mobile Home Si
43.Camp Site
44.Lot Improvemen
45.BA SF - Oce
46.SP Meadow Cond

Proposed Value

Gray

Map Lot 025-305-026-201 Account 4966 Location 5 BRAYSLEY WAY Card 2 Of 2 8/05/2024

Building Style		
1.Conv.	5.Garrison	9.NE farm
2.Ranch	6.Split	10.Colonia
3.R Ranch/	7.Contemp	11.Cottage
4.Cape	8.Log	12.Gambrel

Dwelling Units

Other Units

Stories		
1.1	4.1.5	7.
2.2	5.1.75	8.
3.3	6.2.5	9.

Exterior Walls		
1.Clapboar	5.Stucco	9.B & B
2.Vin/Al	6.Brick	10.Cemplan
3.Compos./	7.Stone	11.Concret
4.Asbestos	8.Wood Shi	12.Wood Bo

Roof Surface		
1.Asphalt	4.Composit	7.Other
2.Slate	5.Wood	8.
3.Metal	6.Roll Roo	9.

SF Masonry Trim

SOLAR VOLTAIC

OPEN-4-

Year Built

Year Remodeled

Foundation		
1.Concrete	4.Wood	7.
2.C Block	5.Slab	8.
3.Br/Stone	6.Piers	9.

Basement		
1.1/4 Bmt	4.Full Bmt	7.
2.1/2 Bmt	5.Crwl	8.
3.3/4 Bmt	6.	9.None

Bsmt Gar # Cars

Wet Basement		
1.Dry	4.	7.
2.Damp	5.	8.
3.Wet	6.	9.

SF Bsmt Living

Fin Bsmt Grade

Secondary Heat

Heat Type		
1.HWBB	5.FWA	9.None
2.HWCI	6.Monitor	10.UNH2F
3.HWRF	7.Electric	11.Geother
4.Steam	8.Fl/Wall	12.Heat/Co

Cool Type		
1.Central	4.W&C Air	7.
2.Evapor	5.	8.
3.H Pump	6.	9.None

Kitchen Style		
1.Modern	4.Obsolete	7.
2.Typical	5.	8.
3.Old Type	6.	9.None

Bath(s) Style		
1.Modern	4.Obsolete	7.
2.Typical	5.	8.
3.Old Type	6.	9.None

Rooms

Bedrooms

Full Baths

Half Baths

Addn Fixtures

Fireplaces

TRIO

Layout		
1.Typical	4.	7.
2.Inadeq	5.	8.
3.	6.	9.

Attic		
1.1/4 Fin	4.Full Fin	7.
2.1/2 Fin	5.Fl/Stair	8.
3.3/4 Fin	6.	9.None

Insulation		
1.Full	4.Minimal	7.
2.Heavy	5.	8.
3.Capped	6.	9.None

Unfinished %

Grade & Factor		
1.E Grade	4.B Grade	7.SC Grade
2.D Grade	5.A Grade	8.
3.C Grade	6.AA Grade	9.Same

SQFT (Footprint)

Condition		
1.Poor	4.Avg	7.V G
2.Fair	5.Avg+	8.Exc
3.Avg-	6.Good	9.Same

Phys. % Good

Funct. % Good

Functional Code		
1.Incomp	4.Delap	7.Layout
2.O-Built	5.Bsmt	8.Long Term
3.Damage	6.Style	9.None

Econ. % Good

Economic Code		
0.None	3.No Power	6.Obsolete
1.Location	4.Generate	9.None
2.Encroach	5.Flood Pl	9.

Entrance Code **0**		
1.Interior	4.Vacant	7.
2.Refusal	5.Estimate	8.
3.Informed	6.	9.

Information Code **0**		
1.Owner	4.Agent	7.
2.Relative	5.Estimate	8.
3.Tenant	6.Other	9.

Date Inspected 8/25/2015

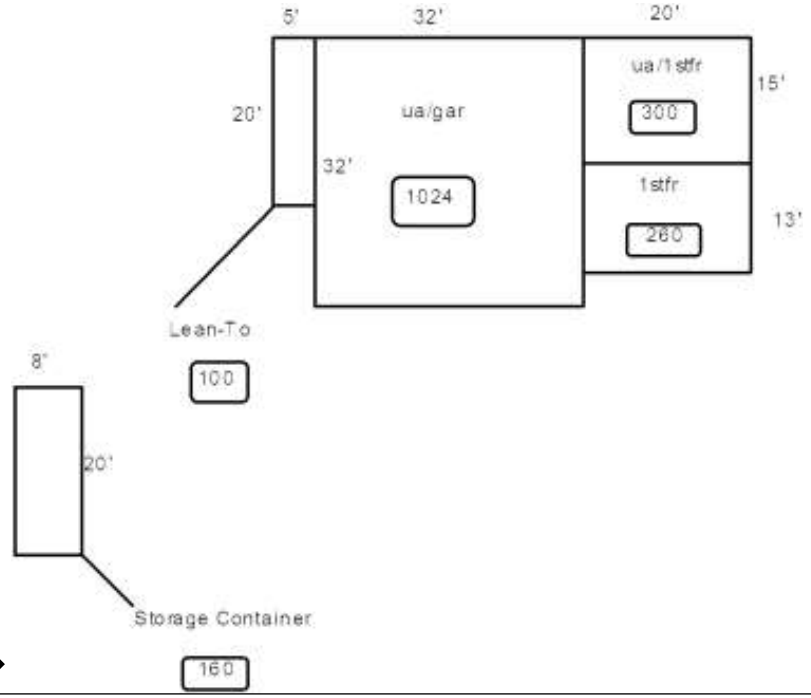

Additions, Outbuildings & Improvements

Type	Year	Units	Grade	Cond	Phys.	Funct.	Sound Value
23 Frame Garage	2020	1024	3 110	4	0 %	100 %	
28 Unfinished Attic	2020	1324	3 110	4	0 %	100 %	
1 One Story Frame	2020	260	4 100	4	0 %	100 %	
1 One Story Frame	2020	300	3 110	4	0 %	100 %	
72 Lean-to	2020	100	3 100	4	0 %	100 %	
83 Plmbing fixt	2020	2	3 100	4	0 %	100 %	
23 Frame Garage	2020	160	3 100	4	0 %	100 %	
					%	%	
					%	%	
					%	%	

1.One Story Fram
2.Two Story Fram
3.Three Story Fr
4.1 & 1/2 Story
5.1 & 3/4 Story
6.2 & 1/2 Story
21.Open Frame Por
22.Encl Frame Por
23.Frame Garage
24.Frame Shed
25.Frame Bay Wind
26.1SFr Overhang
27.Unfin Basement
28.Unfinished Att
29.Finished Attic

Proposed Value