Map Lot 019-015-029-002 Account 647 Location 216 SHAKER RD Card 1 Of 1 8/05/2024

ARNOLD, SCOTT
CARIDDI, ALETHEA
216 SHAKER RD.
Gray ME 04039

B35394P236

Inspection Witnessed By:

X Date

No./Date	Description	Date Insp.

Notes:
5/24 DR FIELD REVIEW

Gray

Property Data

Neighborhood	**81 Fair-Traffic**
Tree Growth Year	**0**
REVIEW	**0**
Bulding Permit	**0**
Zone/Land Use	**11 Rural Residential & Agri**
Secondary Zone	

Topography **2 Rolling** **4 Below Street**

1.Level	4.Below St	7.
2.Rolling	5.Low	8.
3.Above St	6.Swampy	9.

Utilities **2 Public Water** **6 Septic System**

1.Public	4.Drilled Well/Po	7.Cesspool
2.Water	5.Dug Well	8.Lake
3.Holding Ta	6.Septic	9.None

Street **1 Paved**

1.Paved	4.Proposed	
2.Semi Imp	5.R/O/W	8.
3.Gravel	6.	9.None

GIS Map	**19**
Field Review	**1**

Sale Data

Sale Date	**1/07/2019**
Price	

Sale Type **2 Land & Buildings**

1.Land	4.Mobile	7.COM
2.L & B	5.Other	8.
3.Building	6.Condo	9.

Financing **9 Unknown**

1.Convent	4.Seller	7.
2.FHA/VA	5.Private	8.
3.Assumed	6.Cash	9.Unknown

Validity **2 Related Parties**

1.Valid	4.Split	7.Multiple
2.Related	5.Partial	8.Other
3.Distress	6.Exempt	9.Estate

Verified **5 Public Record**

1.Buyer	4.Agent	7.Family
2.Seller	5.Pub Rec	8.Other
3.Lender	6.MLS	9.

Assessment Record

Year	Land	Buildings	Exempt	Total
2011	49,000	137,302	8,500	177,802
2012	49,000	137,302	8,500	177,802
2013	49,000	144,073	8,500	184,573
2014	49,000	148,607	8,500	189,107
2015	49,000	150,400	14,400	185,000
2016	49,000	150,400	0	199,400
2017	49,000	184,200	0	233,200
2018	49,000	184,200	0	233,200
2019	76,500	242,300	20,000	298,800
2020	76,500	242,300	20,000	298,800
2021	76,500	242,300	25,000	293,800
2022	76,500	242,300	25,000	293,800
2023	76,500	270,400	25,000	321,900
Calc.	131,100	419,400	25,000	525,500

Land Data

Front Foot

11.Water (0-200)
12.Water (201-400
13.Water (401-800
14.Water (801-160
15.Water (1601-32

Square Foot

16.Water(3201-
17.Water SF Ameni
18.Water View
19.Water Influenc
20.ShoreFront A

Fract. Acre

21.Base Lot
22.Base Lot Vacan
23.Base Lot Unpav

Acres

24.Acres to 10
25.Acres 11-30
26.Acres 31-50
27.Acres 51& over
28.Acres 71 & Ove
29.Woods (41+)

Type	Effective Frontage	Effective Depth	Influence Factor	Influence Code
			%	
			%	
			%	
			%	
			%	
			%	
			%	
Square Feet				
			%	
			%	
			%	
			%	
			%	
			%	
			%	
Acreage/Sites				
21		1.84	100 %	0
24		2.16	100 %	0
			%	
			%	
			%	
			%	
			%	

Total Acreage 4.00

Influence Codes

1.Unimproved
2.Excess Frtg
3.Topography
4.Size/Shape
5.Access
6.Restriction
7.Open Space
8.Environmental
9.Condo

Acres

30.Blueberry(1-20
31.Blueberry(21 -
32.Crop Land
33.Pasture
34.Shorefront B
35.Shorefront C
36.ANTENNA SITE
37.Softwood TG
38.Mixed Wood TG
39.Hardwood TG
40.Wasteland
41.Woodland
42.Mobile Home Si
43.Camp Site
44.Lot Improvemen
45.BA SF - Oce
46.SP Meadow Cond

Proposed Value

Gray

Map Lot 019-015-029-002 | Account 647 | Location 216 SHAKER RD | Card 1 Of 1 | 8/05/2024

Building Style	**4 Cape Cod**	
1.Conv.	5.Garrison	9.NE farm
2.Ranch	6.Split	10.Colonia
3.R Ranch/	7.Contemp	11.Cottage
4.Cape	8.Log	12.Gambrel
Dwelling Units	**1**	
Other Units	**0**	
Stories	**5 One & 3/4 Story**	
1.1	4.1.5	7.
2.2	5.1.75	8.
3.3	6.2.5	9.
Exterior Walls	**1 Clapboard**	
1.Clapboar	5.Stucco	9.B & B
2.Vin/Al	6.Brick	10.Cemplan
3.Compos./	7.Stone	11.Concret
4.Asbestos	8.Wood Shi	12.Wood Bo
Roof Surface	**3 Metal**	
1.Asphalt	4.Composit	7.Other
2.Slate	5.Wood	8.
3.Metal	6.Roll Roo	9.
SF Masonry Trim	**0**	
SOLAR VOLTAIC	**0**	
OPEN-4-	**0**	
Year Built	**1994**	
Year Remodeled	**2015**	
Foundation	**1 Concrete**	
1.Concrete	4.Wood	7.
2.C Block	5.Slab	8.
3.Br/Stone	6.Piers	9.
Basement	**4 Full Basement**	
1.1/4 Bmt	4.Full Bmt	7.
2.1/2 Bmt	5.Crwl	8.
3.3/4 Bmt	6.	9.None
Bsmt Gar # Cars	**0**	
Wet Basement	**1 Dry Basement**	
1.Dry	4.	7.
2.Damp	5.	8.
3.Wet	6.	9.

SF Bsmt Living	**0**	
Fin Bsmt Grade	**0 0**	
Secondary Heat	**0**	
Heat Type	**100%**	**1 Hot Water BB**
1.HWBB	5.FWA	9.None
2.HWCI	6.Monitor	10.UNH2F
3.HWRF	7.Electric	11.Geother
4.Steam	8.Fl/Wall	12.Heat/Co
Cool Type	**0%**	**9 None**
1.Central	4.W&C Air	7.
2.Evapor	5.	8.
3.H Pump	6.	9.None
Kitchen Style	**2 Typical**	
1.Modern	4.Obsolete	7.
2.Typical	5.	8.
3.Old Type	6.	9.None
Bath(s) Style	**2 Typical Bath(s)**	
1.Modern	4.Obsolete	7.
2.Typical	5.	8.
3.Old Type	6.	9.None
# Rooms	**6**	
# Bedrooms	**3**	
# Full Baths	**2**	
# Half Baths	**1**	
# Addn Fixtures	**0**	
# Fireplaces	**1**	

TRIO

Layout	**1 Typical**	
1.Typical	4.	7.
2.Inadeq	5.	8.
3.	6.	9.
Attic	**9 None**	
1.1/4 Fin	4.Full Fin	7.
2.1/2 Fin	5.Fl/Stair	8.
3.3/4 Fin	6.	9.None
Insulation	**1 Full**	
1.Full	4.Minimal	7.
2.Heavy	5.	8.
3.Capped	6.	9.None
Unfinished %	**0%**	
Grade & Factor	**3 Average 110%**	
1.E Grade	4.B Grade	7.SC Grade
2.D Grade	5.A Grade	8.
3.C Grade	6.AA Grade	9.Same
SQFT (Footprint)	**672**	
Condition	**4 Average**	
1.Poor	4.Avg	7.V G
2.Fair	5.Avg+	8.Exc
3.Avg-	6.Good	9.Same
Phys. % Good	**0%**	
Funct. % Good	**100%**	
Functional Code	**9 None**	
1.Incomp	4.Delap	7.Layout
2.O-Built	5.Bsmt	8.Long Term
3.Damage	6.Style	9.None
Econ. % Good	**100%**	
Economic Code	**None**	
0.None	3.No Power	6.Obsolete
1.Location	4.Generate	9.None
2.Encroach	5.Flood Pl	9.
Entrance Code	**5 Estimated**	
1.Interior	4.Vacant	7.
2.Refusal	5.Estimate	8.
3.Informed	6.	9.
Information Code	**5 Estimate**	
1.Owner	4.Agent	7.
2.Relative	5.Estimate	8.
3.Tenant	6.Other	9.

Date Inspected 5/10/2024

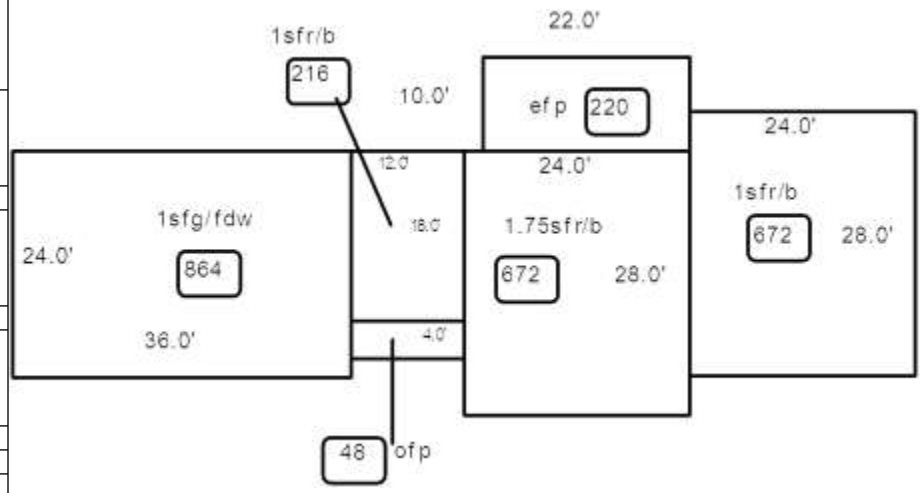

Additions, Outbuildings & Improvements

Type	Year	Units	Grade	Cond	Phys.	Funct.	Sound Value
22 Encl Frame Porch	0	220	0 0	0	0 %	100 %	
23 Frame Garage	0	864	0 0	0	0 %	100 %	
11 1 Story/Basement	0	216	0 0	0	0 %	100 %	
21 Open Frame	0	48	0 0	0	0 %	100 %	
11 1 Story/Basement	0	672	0 0	0	0 %	100 %	
24 Frame Shed	2015	432	3 100	4	0 %	100 %	
					%	%	
					%	%	
					%	%	
					%	%	

1.One Story Fram
2.Two Story Fram
3.Three Story Fr
4.1 & 1/2 Story
5.1 & 3/4 Story
6.2 & 1/2 Story
21.Open Frame Por
22.Encl Frame Por
23.Frame Garage
24.Frame Shed
25.Frame Bay Wind
26.1SFr Overhang
27.Unfin Basement
28.Unfinished Att
29.Finished Attic

Proposed Value