Map Lot 018-307-040-000 Account 3726 Location 106 BIRCHWOOD RD Card 1 Of 2 8/05/2024

SEWALL, DIANE
JOHNSON, PHYLLIS M
144 CAMBELL SHORE RD
GRAY ME 04039

B10250P246

Inspection Witnessed By:

X Date

No./Date	Description	Date Insp.

Notes:

Gray

Property Data

Neighborhood **5 Little Sebago**

Tree Growth Year **0**

REVIEW **0**

Bulding Permit **0**

Zone/Land Use **12 Limited Residential**

Secondary Zone

Topography **2 Rolling**

1.Level 4.Below St 7.
2.Rolling 5.Low 8.
3.Above St 6.Swampy 9.

Utilities **3 Holding Tank**

1.Public 4.Drilled Well/Po 7.Cesspool
2.Water 5.Dug Well 8.Lake
3.Holding Ta 6.Septic 9.None

Street **3 Gravel**

1.Paved 4.Proposed
2.Semi Imp 5.R/O/W 8.
3.Gravel 6. 9.None

GIS Map **18**

Field Review **1**

Sale Data

Sale Date **8/28/1992**

Price

Sale Type
1.Land 4.Mobile 7.COM
2.L & B 5.Other 8.
3.Building 6.Condo 9.

Financing
1.Convent 4.Seller 7.
2.FHA/VA 5.Private 8.
3.Assumed 6.Cash 9.Unknown

Validity
1.Valid 4.Split 7.Multiple
2.Related 5.Partial 8.Other
3.Distress 6.Exempt 9.Estate

Verified
1.Buyer 4.Agent 7.Family
2.Seller 5.Pub Rec 8.Other
3.Lender 6.MLS 9.

Assessment Record

Year	Land	Buildings	Exempt	Total
2012	77,906	36,549	0	114,455
2013	77,900	36,500	0	114,400
2014	77,900	36,500	0	114,400
2018	77,900	36,100	0	114,000
2019	176,700	49,400	0	226,100
2021	176,700	49,400	0	226,100
2022	176,700	49,400	0	226,100
2023	176,700	62,200	0	238,900
Calc.	353,400	75,900	0	429,300

Land Data

Front Foot	Type	Effective Frontage	Effective Depth	Influence Factor	Influence Code
11.Water (0-200)	11	060	000	100 %	0
12.Water (201-400				%	
13.Water (401-800				%	
14.Water (801-160				%	
15.Water (1601-32				%	
				%	
				%	
Square Foot		**Square Feet**			
16.Water(3201-				%	
17.Water SF Ameni				%	
18.Water View				%	
19.Water Influenc				%	
20.ShoreFront A				%	
				%	
				%	
Fract. Acre		**Acreage/Sites**			
21.Base Lot	20	0.12		100 %	0
22.Base Lot Vacan				%	
23.Base Lot Unpav				%	
Acres				%	
24.Acres to 10				%	
25.Acres 11-30				%	
26.Acres 31-50				%	
27.Acres 51& over				%	
28.Acres 71 & Ove				%	
29.Woods (41+)				%	

Total Acreage 0.12

Influence Codes
1.Unimproved
2.Excess Frtg
3.Topography
4.Size/Shape
5.Access
6.Restriction
7.Open Space
8.Environmental
9.Condo
Acres
30.Blueberry(1-20
31.Blueberry(21 -
32.Crop Land
33.Pasture
34.Shorefront B
35.Shorefront C
36.ANTENNA SITE
37.Softwood TG
38.Mixed Wood TG
39.Hardwood TG
40.Wasteland
41.Woodland
42.Mobile Home Si
43.Camp Site
44.Lot Improvemen
45.BA SF - Oce
46.SP Meadow Cond

Proposed Value

Gray

Map Lot 018-307-040-000 | Account 3726 | Location 106 BIRCHWOOD RD | Card 1 Of 2 | 8/05/2024

Building Style	**11 Cottage/Camp**	
1.Conv.	5.Garrison	9.NE farm
2.Ranch	6.Split	10.Colonia
3.R Ranch/	7.Contemp	11.Cottage
4.Cape	8.Log	12.Gambrel
Dwelling Units	**1**	
Other Units	**0**	
Stories	**1 One Story**	
1.1	4.1.5	7.
2.2	5.1.75	8.
3.3	6.2.5	9.
Exterior Walls	**2 Vinyl/Aluminum**	
1.Clapboar	5.Stucco	9.B & B
2.Vin/Al	6.Brick	10.Cemplan
3.Compos./	7.Stone	11.Concret
4.Asbestos	8.Wood Shi	12.Wood Bo
Roof Surface	**1 Asphalt Shingles**	
1.Asphalt	4.Composit	7.Other
2.Slate	5.Wood	8.
3.Metal	6.Roll Roo	9.
SF Masonry Trim	**0**	
SOLAR VOLTAIC	**0**	
OPEN-4-	**0**	
Year Built	**1952**	
Year Remodeled	**0**	
Foundation	**6 Piers**	
1.Concrete	4.Wood	7.
2.C Block	5.Slab	8.
3.Br/Stone	6.Piers	9.
Basement	**9 No Basement**	
1.1/4 Bmt	4.Full Bmt	7.
2.1/2 Bmt	5.Crwl	8.
3.3/4 Bmt	6.	9.None
Bsmt Gar # Cars	**0**	
Wet Basement	**9 No Basement**	
1.Dry	4.	7.
2.Damp	5.	8.
3.Wet	6.	9.

SF Bsmt Living	**0**	
Fin Bsmt Grade	**0 0**	
Secondary Heat	**0**	
Heat Type	**100%**	**9 Not Heated - Entire Dwelling**
1.HWBB	5.FWA	9.None
2.HWCI	6.Monitor	10.UNH2F
3.HWRF	7.Electric	11.Geother
4.Steam	8.Fl/Wall	12.Heat/Co
Cool Type	**0%**	**9 None**
1.Central	4.W&C Air	7.
2.Evapor	5.	8.
3.H Pump	6.	9.None
Kitchen Style	**3 Old Style**	
1.Modern	4.Obsolete	7.
2.Typical	5.	8.
3.Old Type	6.	9.None
Bath(s) Style	**3 Old Style**	
1.Modern	4.Obsolete	7.
2.Typical	5.	8.
3.Old Type	6.	9.None
# Rooms	**3**	
# Bedrooms	**1**	
# Full Baths	**1**	
# Half Baths	**0**	
# Addn Fixtures	**0**	
# Fireplaces	**0**	

TRIO

Layout	**1 Typical**	
1.Typical	4.	7.
2.Inadeq	5.	8.
3.	6.	9.
Attic	**9 None**	
1.1/4 Fin	4.Full Fin	7.
2.1/2 Fin	5.Fl/Stair	8.
3.3/4 Fin	6.	9.None
Insulation	**9 None**	
1.Full	4.Minimal	7.
2.Heavy	5.	8.
3.Capped	6.	9.None
Unfinished %	**0%**	
Grade & Factor	**3 Average 100%**	
1.E Grade	4.B Grade	7.SC Grade
2.D Grade	5.A Grade	8.
3.C Grade	6.AA Grade	9.Same
SQFT (Footprint)	**460**	
Condition	**5 Above Average**	
1.Poor	4.Avg	7.V G
2.Fair	5.Avg+	8.Exc
3.Avg-	6.Good	9.Same
Phys. % Good	**0%**	
Funct. % Good	**100%**	
Functional Code	**9 None**	
1.Incomp	4.Delap	7.Layout
2.O-Built	5.Bsmt	8.Long Term
3.Damage	6.Style	9.None
Econ. % Good	**100%**	
Economic Code	**None**	
0.None	3.No Power	6.Obsolesc
1.Location	4.Generate	9.None
2.Encroach	5.Flood Pl	9.
Entrance Code	**5 Estimated**	
1.Interior	4.Vacant	7.
2.Refusal	5.Estimate	8.
3.Informed	6.	9.
Information Code	**5 Estimate**	
1.Owner	4.Agent	7.
2.Relative	5.Estimate	8.
3.Tenant	6.Other	9.

Date Inspected 9/11/2015

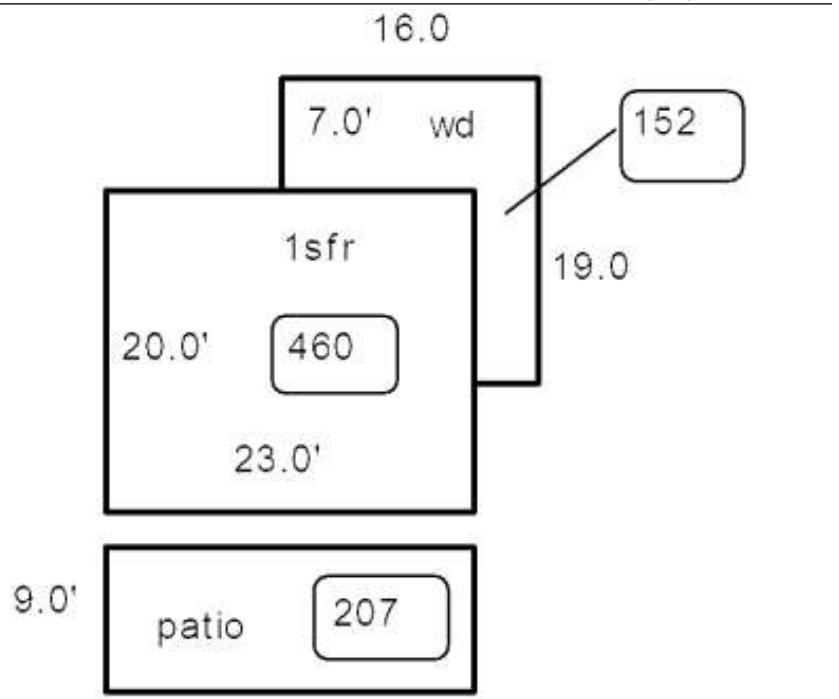

Additions, Outbuildings & Improvements

Type	Year	Units	Grade	Cond	Phys.	Funct.	Sound Value
68 Wood Deck	0	152	0 0	0	0 %	100 %	
62 Patio	0	207	0 0	0	0 %	100 %	
					%	%	
					%	%	
					%	%	
					%	%	
					%	%	
					%	%	
					%	%	
					%	%	

1.One Story Fram
2.Two Story Fram
3.Three Story Fr
4.1 & 1/2 Story
5.1 & 3/4 Story
6.2 & 1/2 Story
21.Open Frame Por
22.Encl Frame Por
23.Frame Garage
24.Frame Shed
25.Frame Bay Wind
26.1SFr Overhang
27.Unfin Basement
28.Unfinished Att
29.Finished Attic

Proposed Value

Map Lot 018-307-040-000 Account 3726 Location 106 BIRCHWOOD RD Card 2 Of 2 8/05/2024

SEWALL, DIANE
JOHNSON, PHYLLIS M
144 CAMBELL SHORE RD
GRAY ME 04039

B10250P246

Inspection Witnessed By:

X Date

No./Date	Description	Date Insp.

Notes:

Gray

Property Data

Neighborhood **5 Little Sebago**

Tree Growth Year **0**

REVIEW **0**

Bulding Permit **0**

Zone/Land Use **12 Limited Residential**

Secondary Zone

Topography **2 Rolling**

1.Level 4.Below St 7.
2.Rolling 5.Low 8.
3.Above St 6.Swampy 9.

Utilities **9 None**

1.Public 4.Drilled Well/Po 7.Cesspool
2.Water 5.Dug Well 8.Lake
3.Holding Ta 6.Septic 9.None

Street **3 Gravel**

1.Paved 4.Proposed
2.Semi Imp 5.R/O/W 8.
3.Gravel 6. 9.None

GIS Map **18**

Field Review **0**

Sale Data

Sale Date **8/28/1992**

Price

Sale Type

1.Land 4.Mobile 7.COM
2.L & B 5.Other 8.
3.Building 6.Condo 9.

Financing

1.Convent 4.Seller 7.
2.FHA/VA 5.Private 8.
3.Assumed 6.Cash 9.Unknown

Validity

1.Valid 4.Split 7.Multiple
2.Related 5.Partial 8.Other
3.Distress 6.Exempt 9.Estate

Verified

1.Buyer 4.Agent 7.Family
2.Seller 5.Pub Rec 8.Other
3.Lender 6.MLS 9.

Assessment Record

Year	Land	Buildings	Exempt	Total
2013	0	0	0	0
2014	0	0	0	0
2018	0	0	0	0
2019	0	30,700	0	30,700
2021	0	30,700	0	30,700
2022	0	30,700	0	30,700
2023	0	38,900	0	38,900
Calc.	0	50,400	0	50,400

Land Data

Front Foot

11.Water (0-200)
12.Water (201-400
13.Water (401-800
14.Water (801-160
15.Water (160-32

Square Foot

16.Water(3201-
17.Water SF Ameni
18.Water View
19.Water Influenc
20.ShoreFront A

Fract. Acre

21.Base Lot
22.Base Lot Vacan
23.Base Lot Unpav

Acres

24.Acres to 10
25.Acres 11-30
26.Acres 31-50
27.Acres 51& over
28.Acres 71 & Ove
29.Woods (41+)

Type	Effective Frontage	Effective Depth	Influence Factor	Influence Code
			%	
			%	
			%	
			%	
			%	
			%	
			%	
Square Feet				
			%	
			%	
			%	
			%	
			%	
			%	
			%	
Acreage/Sites				
			%	
			%	
			%	
			%	
			%	
			%	
			%	

Total Acreage 0.00

Influence Codes

1.Unimproved
2.Excess Frtg
3.Topography
4.Size/Shape
5.Access
6.Restriction
7.Open Space
8.Environmental
9.Condo

Acres

30.Blueberry(1-20
31.Blueberry(21 -
32.Crop Land
33.Pasture
34.Shorefront B
35.Shorefront C
36.ANTENNA SITE
37.Softwood TG
38.Mixed Wood TG
39.Hardwood TG
40.Wasteland
41.Woodland
42.Mobile Home Si
43.Camp Site
44.Lot Improvemen
45.BA SF - Oce
46.SP Meadow Cond

Proposed Value

Gray

Map Lot 018-307-040-000 | Account 3726 | Location 106 BIRCHWOOD RD | Card 2 Of 2 | 8/05/2024

Building Style **11 Cottage/Camp**		
1.Conv.	5.Garrison	9.NE farm
2.Ranch	6.Split	10.Colonia
3.R Ranch/	7.Contemp	11.Cottage
4.Cape	8.Log	12.Gambrel
Dwelling Units **1**		
Other Units **0**		
Stories **1 One Story**		
1.1	4.1.5	7.
2.2	5.1.75	8.
3.3	6.2.5	9.
Exterior Walls **3 Composition/**		
1.Clapboar	5.Stucco	9.B & B
2.Vin/Al	6.Brick	10.Cemplan
3.Compos./	7.Stone	11.Concret
4.Asbestos	8.Wood Shi	12.Wood Bo
Roof Surface **1 Asphalt Shingles**		
1.Asphalt	4.Composit	7.Other
2.Slate	5.Wood	8.
3.Metal	6.Roll Roo	9.
SF Masonry Trim **0**		
SOLAR VOLTAIC **0**		
OPEN-4- **0**		
Year Built **1952**		
Year Remodeled **0**		
Foundation **6 Piers**		
1.Concrete	4.Wood	7.
2.C Block	5.Slab	8.
3.Br/Stone	6.Piers	9.
Basement **9 No Basement**		
1.1/4 Bmt	4.Full Bmt	7.
2.1/2 Bmt	5.Crwl	8.
3.3/4 Bmt	6.	9.None
Bsmt Gar # Cars **0**		
Wet Basement **9 No Basement**		
1.Dry	4.	7.
2.Damp	5.	8.
3.Wet	6.	9.

SF Bsmt Living **0**		
Fin Bsmt Grade **0 0**		
Secondary Heat **0**		
Heat Type **100%** **6 Monitor**		
1.HWBB	5.FWA	9.None
2.HWCI	6.Monitor	10.UNH2F
3.HWRF	7.Electric	11.Geother
4.Steam	8.Fl/Wall	12.Heat/Co
Cool Type **0%** **9 None**		
1.Central	4.W&C Air	7.
2.Evapor	5.	8.
3.H Pump	6.	9.None
Kitchen Style **3 Old Style**		
1.Modern	4.Obsolete	7.
2.Typical	5.	8.
3.Old Type	6.	9.None
Bath(s) Style **3 Old Style**		
1.Modern	4.Obsolete	7.
2.Typical	5.	8.
3.Old Type	6.	9.None
# Rooms **2**		
# Bedrooms **1**		
# Full Baths **0**		
# Half Baths **0**		
# Addn Fixtures **1**		
# Fireplaces **0**		

TRIO

Layout **1 Typical**		
1.Typical	4.	7.
2.Inadeq	5.	8.
3.	6.	9.
Attic **9 None**		
1.1/4 Fin	4.Full Fin	7.
2.1/2 Fin	5.Fl/Stair	8.
3.3/4 Fin	6.	9.None
Insulation **9 None**		
1.Full	4.Minimal	7.
2.Heavy	5.	8.
3.Capped	6.	9.None
Unfinished % **0%**		
Grade & Factor **2 Fair 100%**		
1.E Grade	4.B Grade	7.SC Grade
2.D Grade	5.A Grade	8.
3.C Grade	6.AA Grade	9.Same
SQFT (Footprint) **483**		
Condition **4 Average**		
1.Poor	4.Avg	7.V G
2.Fair	5.Avg+	8.Exc
3.Avg-	6.Good	9.Same
Phys. % Good **0%**		
Funct. % Good **50%**		
Functional Code **9 None**		
1.Incomp	4.Delap	7.Layout
2.O-Built	5.Bsmt	8.Long Term
3.Damage	6.Style	9.None
Econ. % Good **100%**		
Economic Code **None**		
0.None	3.No Power	6.Obsolete
1.Location	4.Generate	9.None
2.Encroach	5.Flood Pl	9.
Entrance Code **5 Estimated**		
1.Interior	4.Vacant	7.
2.Refusal	5.Estimate	8.
3.Informed	6.	9.
Information Code **5 Estimate**		
1.Owner	4.Agent	7.
2.Relative	5.Estimate	8.
3.Tenant	6.Other	9.

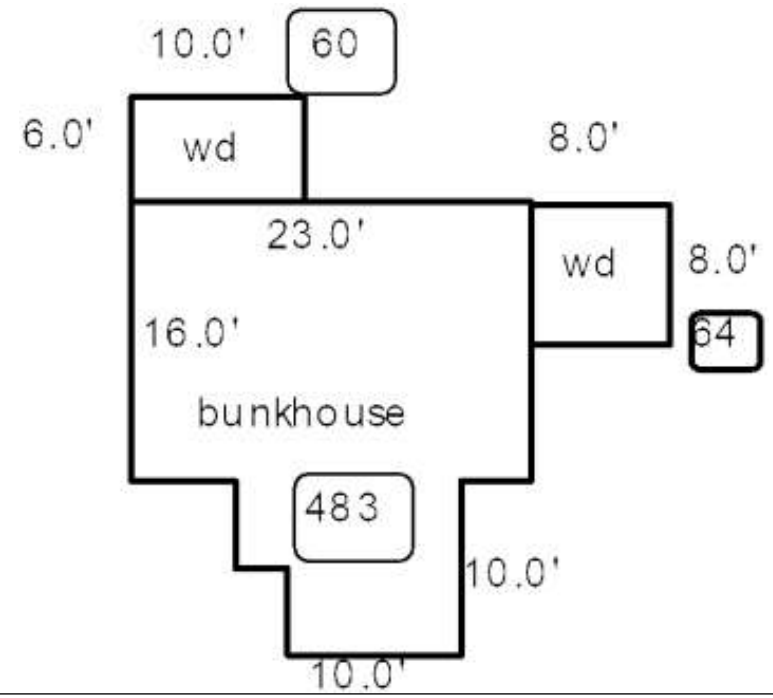

Date Inspected 9/11/2015

Additions, Outbuildings & Improvements

Type	Year	Units	Grade	Cond	Phys.	Funct.	Sound Value
68 Wood Deck	0	60	0 0	0	0 %	100 %	
68 Wood Deck	0	64	0 0	0	0 %	100 %	
24 Frame Shed	0	32	1 100	4	0 %	100 %	
					%	%	
					%	%	
					%	%	
					%	%	
					%	%	
					%	%	
					%	%	

1.One Story Fram
2.Two Story Fram
3.Three Story Fr
4.1 & 1/2 Story
5.1 & 3/4 Story
6.2 & 1/2 Story
21.Open Frame Por
22.Encl Frame Por
23.Frame Garage
24.Frame Shed
25.Frame Bay Wind
26.1SFr Overhang
27.Unfin Basement
28.Unfinished Att
29.Finished Attic

Proposed Value